SONY

HD SYNC CONVERTER

HDSC-1000

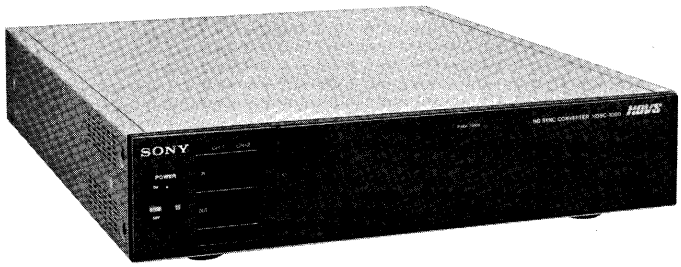

HDVS

OPERATION AND MAINTENANCE MANUAL

1st Edition (Revised 2)

Serial No. 10001 and Higher

Warning—This equipment generates, uses, and can radiate radio frequency energy and if not installed and used in accordance with the instructions manual, may cause interference to radio communications. It has been tested and found to comply with the limits for a Class A computing device pursuant to Subpart J of Part 15 of FCC Rules, which are designed to provide reasonable protection against such interference when operated in a commercial environment. Operation of this equipment in a residential area is likely to cause interference in which case the user at his own expense will be required to take whatever measures may be required to correct the interference.

For the customers in Canada

This apparatus complies with the Class A limits for radio noise emissions set out in Radio Interference Regulations.

Pour les utilisateurs au Canada

Cet appareil est conforme aux normes Classe A pour bruits radioélectriques, spécifiés dans le Règlement sur le brouillage radioélectrique.

SAFETY CHECK-OUT

After correcting the original service problem, perform the following safety checks before releasing the set to the customer:

Check the metal trim, "metallized" knobs, screws, and all other exposed metal parts for AC leakage. Check leakage as described below.

LEAKAGE TEST

The AC leakage from any exposed metal part to earth ground and from all exposed metal parts to any exposed metal part having a return to chassis, must not exceed 3.5 mA. Leakage current can be measured by any one of three methods.

1. A commercial leakage tester, such as the Simpson 229 or RCA WT-540A. Follow the manufacturers' instructions to use these instruments.
2. A battery-operated AC milliammeter. The Data Precision 245 digital multimeter is suitable for this job.
3. Measuring the voltage drop across a resistor by means of a VOM or battery-operated AC voltmeter. The "limit" indication is 5.25 V, so analog meters must have an accurate low-voltage scale. The Simpson 250 and Sanwa SH-63Trd are examples of a passive VOM that is suitable. Nearly all battery operated digital multimeters that have a 20 V AC range are suitable. (See Fig. A)

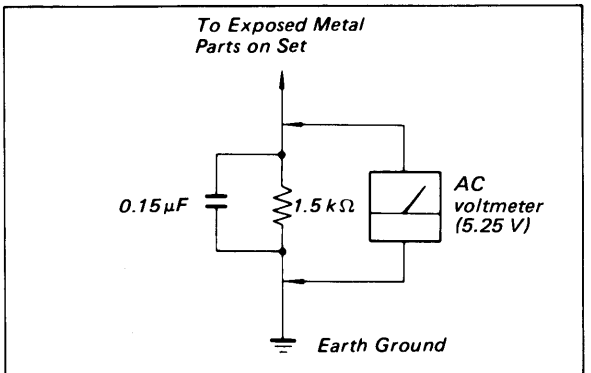

Fig. A. Using an AC voltmeter to check AC leakage.

目　次
TABLE OF CONTENTS

1. 取り扱い操作

1-1. 概要 …… 1-1 (J)
1-1-1. 特徴 …… 1-1 (J)
1-1-2. 規格について …… 1-2 (J)
1-1-3. ご使用になる前に …… 1-3 (J)
1-2. 仕様 …… 1-4 (J)
1-3. 各部の名称と働き …… 1-6 (J)
1-3-1. コネクターパネル …… 1-6 (J)
1-3-2. 操作パネル …… 1-7 (J)
1-3-3. 表示部 …… 1-9 (J)
1-4. 接続 …… 1-10 (J)
1-5. 新・旧規格の同期位相関係 …… 1-11 (J)

2. 設置

2-1. 開梱と再梱包 …… 2-1 (J)
2-2. 標準付属品 …… 2-2 (J)
2-3. アクセサリー（オプション） …… 2-2 (J)
2-4. 電源 …… 2-2 (J)
2-5. 設置環境 …… 2-3 (J)
2-6. 設置スペース …… 2-3 (J)
2-6-1. 設置条件 …… 2-3 (J)
2-6-2. 外形寸法 …… 2-3 (J)
2-7. ラックマウントの方法 …… 2-5 (J)
2-8. コンソールユニットSU-1010への取り付け方法 …… 2-6 (J)
2-9. スイッチのセッティング …… 2-9 (J)

3. サービスインフォメーション

3-1. プリント基板配置図 …… 3-1 (J)
3-2. 外装取り外し …… 3-1 (J)
3-2-1. フロントパネル取り外し …… 3-1 (J)
3-2-2. SG-138基板取り外し …… 3-2 (J)
3-2-3. コネクターパネル開閉 …… 3-2 (J)
3-2-4. 側板，天板，底板取り外し …… 3-3 (J)
3-2-5. 表示パネル取り外し …… 3-3 (J)
3-2-6. 電源ユニット取り外し …… 3-4 (J)
3-3. サービス上の注意事項 …… 3-4 (J)
3-3-1. SG-138基板のロック機構 …… 3-4 (J)
3-3-2. 電源ユニットの注意事項 …… 3-5 (J)
3-3-3. 角型固定インダクターの取り扱い注意 …… 3-5 (J)
3-3-4. 補修用部品注意事項 …… 3-5 (J)
3-4. SG-138基板の調整と延長基板 …… 3-6 (J)
3-5. 点検調整用信号 …… 3-6 (J)

1. OPERATION

1-1. Outline . . . . . 1-1 (E)
1-1-1. Features . . . . . 1-1 (E)
1-1-2. Three Different HDTV Signal Formats . . . . . 1-2 (E)
1-1-3. Preliminary Setting . . . . . 1-3 (E)
1-2. Specifications . . . . . 1-4 (E)
1-3. Location and Function of Parts . . . . . 1-6 (E)
1-3-1. Connector Panel . . . . . 1-6 (E)
1-3-2. Control Panel . . . . . 1-7 (E)
1-3-3. Indicator Lamp Section . . . . . 1-9 (E)
1-4. Connection . . . . . 1-10(E)
1-5. Sync Phase Relationships between New and Preceding Formats . . . . . 1-11(E)

2. INSTALLATION

2-1. Unpacking and Repacking . . . . . 2-1 (E)
2-2. Supplied Accessories . . . . . 2-2 (E)
2-3. Optional Accessories . . . . . 2-2 (E)
2-4. Power Requirements . . . . . 2-2 (E)
2-5. Operating Conditions . . . . . 2-3 (E)
2-6. Installation Space . . . . . 2-3 (E)
2-6-1. Installation Conditions . . . . . 2-3 (E)
2-6-2. External Dimensions . . . . . 2-3 (E)
2-7. Rack Mounting Method . . . . . 2-5 (E)
2-8. Method for Mounting to the Consoleunit SU-1010 . . . . . 2-6 (E)
2-9. Switch Setting . . . . . 2-9 (E)

3. SERVICE INFORMATION

3-1. Printed Circuit Board Location . . . . . 3-1 (E)
3-2. Cabinet Removal . . . . . 3-1 (E)
3-2-1. Front Panel Removal . . . . . 3-1 (E)
3-2-2. SG-138 Board Removal . . . . . 3-2 (E)
3-2-3. Connector Panel Opening/Closing . . . 3-2 (E)
3-2-4. Side, Top and Bottom Cover Removal . . . . . 3-3 (E)
3-2.5. Indicator Panel Removal . . . . . 3-3 (E)
3-2-6. Power Supply Unit Removal . . . . . 3-4 (E)
3-3. Notes On Servicing . . . . . 3-4 (E)
3-3-1. SG-138 Board Lock Mechanism . . . . . 3-4 (E)
3-3-2. Notes on the Power Supply Unit . . . . 3-5 (E)
3-3-3. Notes on Square Fixed Inductor . . . . 3-5 (E)
3-3-4. Notes on Repair Parts . . . . . 3-6 (E)
3-4. Adjustment of SG-138 Board and Extension Board . . . . . 3-6 (E)
3-5. Signal for Checking and Adjustment . . . . . 3-6 (E)

4. 回路説明

4-1. 概要 ····· 4-1 (J)
4-2. シンクジェネレーター ····· 4-5 (J)
4-2-1. 入力セレクト回路 ····· 4-5 (J)
4-2-2. 旧規格同期分離回路 ····· 4-5 (J)
4-2-3. 旧規格フレーム分離回路 ····· 4-6 (J)
4-2-4. バースト分離回路 ····· 4-6 (J)
4-2-5. 新規格同期／フレーム分離回路 ····· 4-7 (J)
4-2-6. 位相比較器およびVCO ····· 4-8 (J)
4-2-7. 入力同期信号判別回路 ····· 4-9 (J)
4-2-8. Vタイミング信号発生回路 ····· 4-10 (J)
4-2-9. 同期信号発生回路 ····· 4-11 (J)
4-2-10. Hタイミング信号発生回路 ····· 4-11 (J)
4-2-11. 同期位相調整回路 ····· 4-12 (J)
4-3. ビデオ信号回路 ····· 4-12 (J)
4-3-1. SYNC出力アンプ ····· 4-12 (J)
4-3-2. ビデオ入出力アンプ ····· 4-13 (J)
4-3-3. 525 SYNC出力回路 (CH-2のみ) ··· 4-13 (J)

5. 調整のための一般情報

5-1. 調整部品索引 ····· 5-1 (J)
5-2. 調整順序 ····· 5-1 (J)
5-3. プリント基板交換後の調整 ····· 5-1 (J)

6. 調整前の準備

6-1. 使用機器 ····· 6-1 (J)
6-2. スイッチの設定 ····· 6-2 (J)

7. 電源部調整

7-1. 無負荷時電源部調整 ····· 7-1 (J)
7-1-1. 無負荷時スイッチングパルス DUTY調整 ····· 7-1 (J)
7-1-2. 無負荷時電圧調整 ····· 7-1 (J)
7-1-3. 無負荷時ショート電流調整 ····· 7-2 (J)
7-2. 負荷レギュレーター出力電圧調整 ····· 7-2 (J)

8. シンクコンバーター調整

8-1. 内部発振周波数調整 ····· 8-1 (J)
8-2. バースト位相調整 ····· 8-2 (J)
8-3. SYNC出力レベル調整 ····· 8-3 (J)
8-4. SYNC出力位相調整 ····· 8-4 (J)
8-5. ビデオアウトレベル調整 ····· 8-5 (J)
8-6. ビデオアウトF特調整 ····· 8-7 (J)

4. THEORY OF OPERATION

4-1. Outline . . . . . 4-1 (E)
4-2. SYNC Generator . . . . . 4-5 (E)
4-2-1. Input Selector . . . . . 4-5 (E)
4-2-2. Preceding Format SYNC Separator . . 4-5 (E)
4-2-3. Preceding Format Frame Separator . . 4-6 (E)
4-2-4. Burst Separator . . . . . 4-6 (E)
4-2-5. New Format SYNC/Frame Separator . 4-7 (E)
4-2-6. Phase Comparator and VCO . . . . . 4-8 (E)
4-2-7. Input SYNC Signal Detector . . . . . 4-9 (E)
4-2-8. V Timing Signal Generator . . . . . 4-10(E)
4-2-9. SYNC Generator . . . . . 4-11(E)
4-2-10. H Timing Signal Generator . . . . . 4-11(E)
4-2-11. SYNC Phase Adjustment Circuit . . . . 4-12(E)
4-3. Video Signal Circuit . . . . . 4-12(E)
4-3-1. SYNC Output Amplifier . . . . . 4-12(E)
4-3-2. Video Input/Output Amplifier . . . . . 4-13(E)
4-3-3. 525-Line Format SYNC Output Circuit (CH-2 only) . . . . . 4-13(E)

5. GENERAL INFORMATION FOR ALIGNMENT

5-1. Index of Adjustment Components . . . . . 5-1 (E)
5-2. Alignment Sequence . . . . . 5-1 (E)
5-3. Adjustments After Replacing Board . . . . . 5-1 (E)

6. PREPARATION FOR ALIGNMENT

6-1. Test Equipment . . . . . 6-1 (E)
6-2. Initial Setting of Switches . . . . . 6-2 (E)

7. POWER SUPPLY ALIGNMENT

7-1. Power Supply Adjustment without Load . . 7-1 (E)
7-1-1. Switching Pulse Duty Adj. without Load . . . . . 7-1 (E)
7-1-2. Voltage Adjustment without Load . . . 7-1 (E)
7-1-3. Short Current Adj. without Load . . . . 7-2 (E)
7-2. Regulator Output Voltage Adj. with Load . 7-2 (E)

8. SYNC CONVERTER ALIGNMENT

8-1. Adjusting the Internal Oscillating Freq. . . . 8-1 (E)
8-2. Burst Phase Adjustment . . . . . 8-2 (E)
8-3. SYNC Output Level Adjustment . . . . . 8-3 (E)
8-4. SYNC Output Phase Adjustment . . . . . 8-4 (E)
8-5. Video Out Level Adjustment . . . . . 8-5 (E)
8-6. Video Out Freq. Response Adjustment . . . 8-7 (E)

A. BLOCK DIAGRAMS

Overall A-1
SG-138 Board; SYNC Converter A-5

B. SCHEMATIC DIAGRAMS & BOARD LAYOUTS

SG-138 Board; SYNC Converter B-1
DP-88 Board; Display B-23
Power Supply B-25
PW-91A Board; Switching Regulator
CT-29 Board; Power Supply Control
MB-201 Board; Mother Board B-35
Frame Wiring B-37

C. SEMICONDUCTOR PIN ASSIGNMENTS

Semiconductor Index C-1
Diode C-2
Transistor C-2
IC C-3

D. REPLACEABLE PARTS AND OPTIONAL FIXTURE

Notes on Repair Parts D-1
Chassis Assembly D-3
Power Supply Assembly D-5
Nonpolar Capcitor D-7
Electrolytic Capacitor D-7
Resistor D-8
CT-29 Board D-9
DP-88 Board D-9
MB-201 Board D-10
PW-91A Board D-10
SG-138 Board D-12
Frame D-16
Accesories Supplied D-16

E. CHANGED PARTS

第1章　取り扱い操作

1-1. 概要

新しく1125/60高精細度テレビジョン方式スタジオ規格(BTA S-001)が決定され、ソニーの高精細度ビデオシステムHDVS (High Definition Video System)も今後、これに準拠していく予定です。この規格が採用している同期信号形式は正負両極性3値同期信号と呼ばれ、従来あった規格2種類のいずれとも異なっています。このため、新規格の機器と旧規格機器とを直接、接続することはできません。

HDシンクコンバーターHDSC-1000は、新・旧規格信号の同期信号部分を相互変換し、規格の異なる機器同士の接続を可能にします。

1-1-1. 特徴

2系統の同期変換器

本機は、同期変換器――入力信号の同期信号部分を変換して出力する――2系統で構成されています。この2系統は独立して使用でき、旧規格→新規格、新規格→旧規格、いずれの変換も可能です。

出力端子は各系統に2組ずつ用意しました。

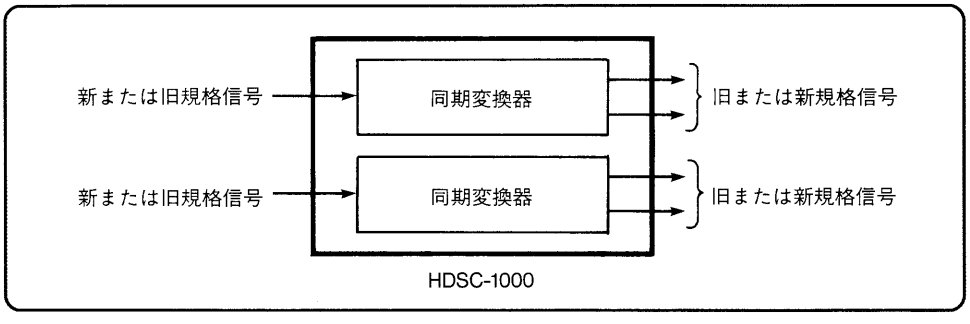

1入力4出力にも切り換え可能

前面スイッチの切り換えにより、1入力4出力の同期変換器になります。同期変換を行わない設定にすれば、1入力4出力の映像分配器としても使用できます。

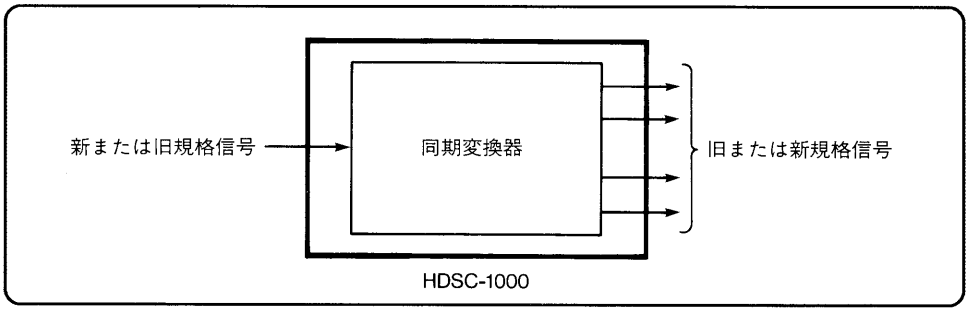

規格の自動判別

入力信号の規格(新/旧)をセット内部で自動的に判別し、表示します。さらに、内部にVCO (Voltage Controlled Oscillator)ブロックを追加すると、2種類のフィールド周波数の判別と、対応するVCOのロックを自動的に行います。

その他の機能

- 同期信号を付加しない映像信号を出力することも可能です。
- 機器内部のVCOをロックするための入力信号として、映像信号に付加されている同期信号および基準同期信号のどちらを使用するかを選択することができます。
- 525ライン規格の基準同期信号出力端子を装備しています。

1-1-2. 規格について

この取扱説明書では、従来の規格2種類および新しい規格を、次の略称で表します。同期信号部分の波形およびその位相関係の詳細は1-5.「新・旧規格の同期位相関係」をご覧ください。

新規格	正負両極性3値同期信号規格 フィールド周波数　60.00Hz アスペクト比　16:9 映像信号　G/B/R または $Y/P_B/P_R$	水平同期信号波形： 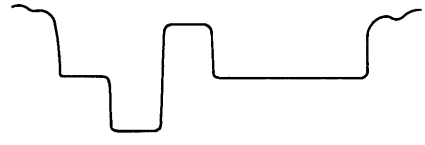
旧規格N	筑波科学万博同期信号規格 フィールド周波数　59.94Hz アスペクト比　5:3 映像信号　$Y/C_W/C_N$	水平同期信号波形： 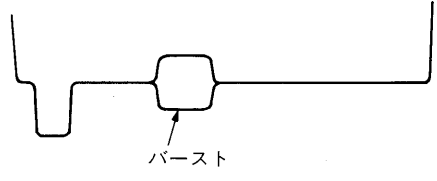
旧規格S	ソニー信号発生器規格による同期信号 フィールド周波数　60.00Hz アスペクト比　5:3 映像信号　G/B/R	水平同期信号波形： 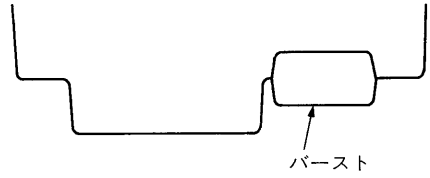

ご注意

接続する機器によっては、本機による同期変換のほかに、フィールド周波数の変換や映像信号のマトリックス変換が必要です。

1-1-3. ご使用になる前に

旧規格Sの機器を接続する場合

オプションの追加や内部スイッチの設定変更は必要ありません。

旧規格Nの機器を接続する場合

VCOブロックの追加と内部スイッチの切り換えが必要です。

工場出荷時、セットが搭載しているVCOは、フィールド周波数60.00Hzの入力信号対応のものだけです。このため、フィールド周波数59.94Hzの旧規格N信号を入力しても、VCOはロックしません。

VCOブロックを追加すると、N/Sどちらの旧規格信号を入力してもセットは2種類のフィールド周波数(59.94Hz/60.00Hz)を判別し、対応するVCOが自動的にその周波数にロックします。

また、工場出荷時、出力する旧規格信号をセット内部のスイッチで旧規格Sに設定していますので、旧規格Nの信号を出力する場合はスイッチを切り換える必要があります。

内部スイッチの切り換えについて、詳しくは第2章「設置」をご覧ください。

VCOブロックの追加についてはソニーの営業担当者にご相談ください。

1-2. 仕様

一般

電源電圧	AC 100～120V ±10% / 220～240V ±10% 切り換え可能
電源周波数	50/60Hz
消費電力	100W
動作温度	0°C～40°C
保存温度	−10°C～+60°C
湿度	10～90%(ただし、結露状態は不可)
重量	9.5kg
外形寸法	424×88×515mm(幅/高さ/奥行き)
ビデオバンド幅	0～30MHz ±0.5dB
ビデオ入出力レベル偏差	
	±1%
ビデオ入出力ディレー時間	
	20nsec ±5nsec
同期変換精度	規定値 ±20nsec

入力端子

VIDEO IN(CH-1/CH-2)

G/B/R または $Y/P_B/P_R$ または $Y/C_W/C_N$

0.7Vp-p(映像部分、新・旧規格とも)

0.3Vp-p ±3dB(同期部分、旧規格)

±0.3V±3dB(同期部分、新規格)

75Ω、不平衡

SYNC 0.3Vp-p ±3dB(旧規格)

±0.3V ±3dB(新規格)

75Ω、不平衡

出力端子

VIDEO OUT 1,2(CH-1/CH-2)

G/B/R または $Y/P_B/P_R$ または $Y/C_W/C_N$

0.7Vp-p(映像部分、新・旧規格とも)

0.3Vp-p(同期部分、旧規格)

±0.3V(同期部分、新規格)

75Ω、不平衡

SYNC 0.3Vp-p(旧規格)

±0.3V(新規格)

75Ω、不平衡

525 SYNC OUT 0.3Vp-p

75Ω、不平衡、同期負

付属品

コンソールラック(SU-1010)組み込み用キット

ラックアングル 左・右(各1)

板ナット (2)

標準ラック組み込み用キット

ラックアングル左・右(各1)

ねじ +K 4×10 (4)

ねじ +B 4×12 (4)

オペレーション アンド メンテナンスマニュアル(1)

仕様および外観は、改良のため予告なく変更することがありますが、ご了承ください。

1-3. 各部の名称と働き

1-3-1. コネクターパネル

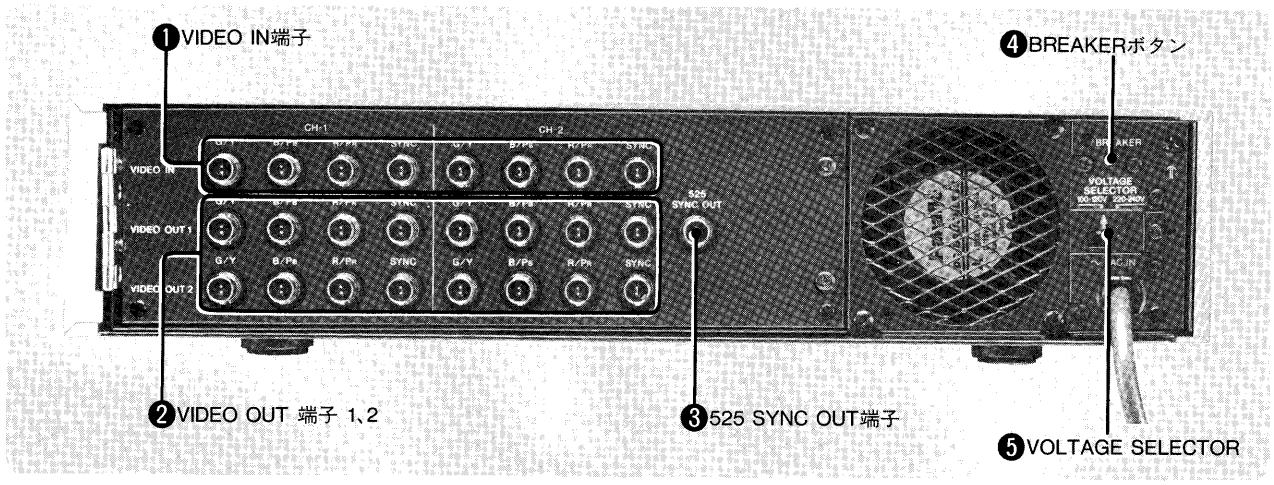

❶、❷は2系統(CH-1, CH-2)独立の入出力端子です。

❶ VIDEO IN 端子 (BNC型)

G/B/R または $Y/P_B/P_R$ あるいは $Y/C_W/C_N$ の映像信号を入力します。SYNC端子には、映像信号に同期した基準同期(REF SYNC;リファレンスシンク)信号を入力します。

映像信号に同期信号が付加されていない場合、SYNC端子に必ずREF SYNC信号を入力してください。

❷ VIDEO OUT 端子 1, 2 (BNC型)

同期信号部分を変換した映像信号の出力端子です。VIDEO OUT 1とVIDEO OUT 2には同じ信号を出力します。

SYNC端子には、映像信号に同期したREF SYNC信号を出力します。

❸ 525 SYNC OUT 端子 (BNC型)

525ラインの基準同期信号を出力します。位相関係は1-5.「新・旧規格の同期位相関係」をご覧ください。

525ライン規格の編集機を使用するとき、REF SYNC信号としてご利用ください。

❹ BREAKER (ブレーカー) ボタン

セット内部に過大電流が流れると、ブレーカーが働いて電源が自動的に切れます。内部の点検をしてからこのボタンを押し込んでください。異常がなければ再び電源が入ります。

❺ VOLTAGE SELECTOR (電源電圧セレクター)

100-120V	AC 100～120V ±10% (90～132V)
220-240V	AC 220～240V ±10% (198～264V)

工場出荷時は「100-120V」に設定しています。220～240Vの地域でご使用になる場合は、セレクターのカバーを外し、「220-240V」に切り換えてください。

1-3-2. 操作パネル

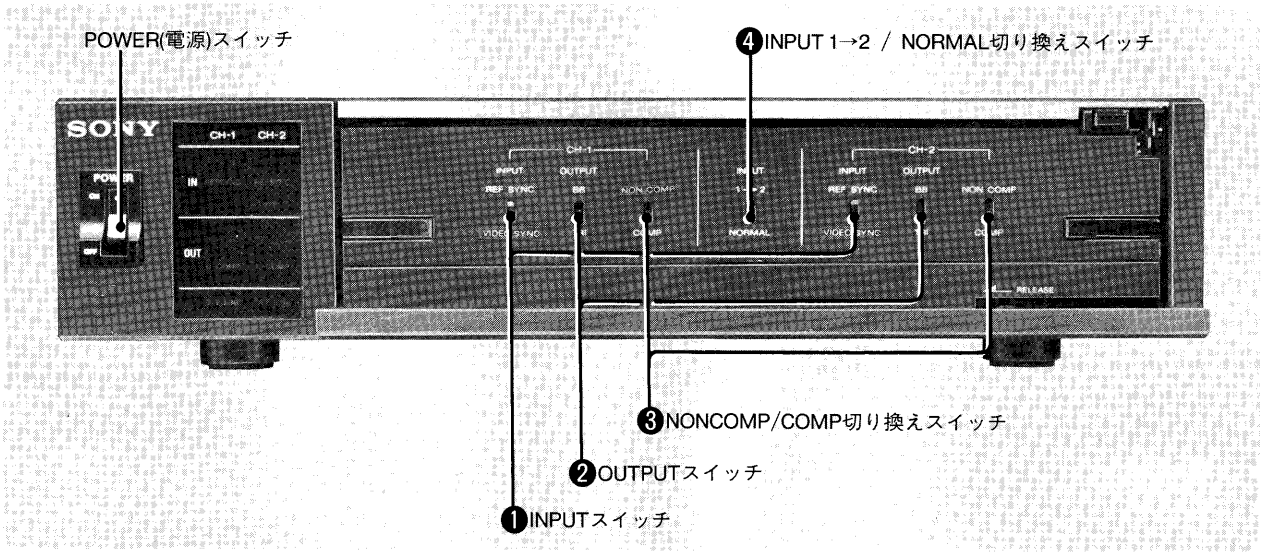

❶～❸は2系統(CH-1, CH-2)別々に設定します。

❶ INPUT (入力) スイッチ

本機内部のVCOをロックするための信号を選びます。

REF SYNC：SYNC端子に入力した基準同期信号

VIDEO SYNC：入力映像信号に付加されている同期信号

(3つの入力映像信号のうち、コネクターパネルに向かって左端の信号(GまたはY)を使用します。)

❷ OUTPUT (出力) スイッチ

出力信号の同期信号形式を選びます。

BB(ブラックバースト)：旧規格(工場出荷時、内部スイッチで旧規格Sに設定しています。旧規格Nへの変更は第2章「設置」をご覧下さい。)

TRI(トライ)：新規格

❸ NONCOMP/COMP 切り換えスイッチ

NONCOMP(ノンコンポジット)：出力映像信号に同期信号を付加しない。

COMP(コンポジット)：出力映像信号に同期信号を付加する。

❹ INPUT 1→2 / NORMAL 切り換えスイッチ

INPUT 1→2：本機を1入力4出力の同期変換器として使用するとき。

CH-1に入力します。CH-2の入力コネクターは抜いておきます。

NORMAL：本機を1入力2出力の同期変換器2系統として使用するとき。

ご注意

2系統のうち1系統だけを使用する場合は、スイッチをINPUT 1→2に切り換え、CH-1に入力してください。

旧規格Nの機器を接続するときのご注意

旧規格Nは、C_W, C_N 信号には同期信号を付加せず、バーストのみを付加するよう定めていますが、本機でNONCOMP/COMP切り換えスイッチ❸をCOMP側にすると、同期・バースト共に付加した信号を出力します(下図参照)。接続する機器の動作に影響がある場合はこのスイッチをNONCOMP側にし、同期にはSYNC端子からの出力信号を使用してください。

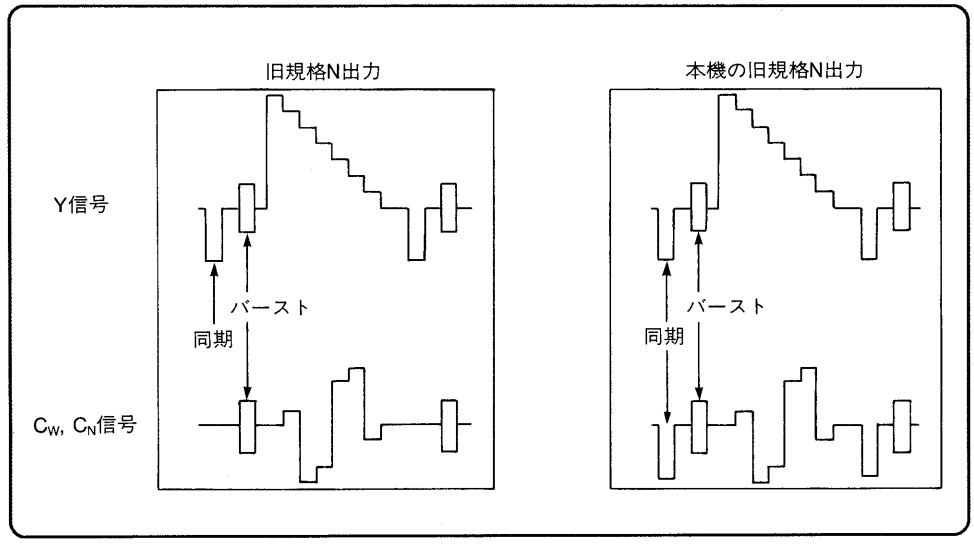

1-3-3. 表示部

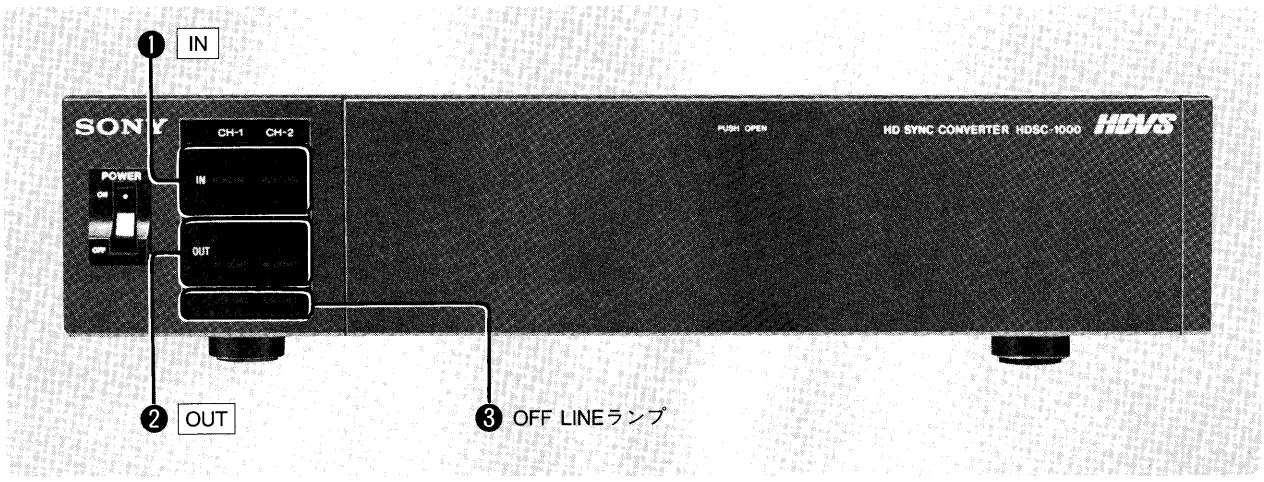

❶～❸は2系統(CH-1, CH-2)別々に表示します。

❶ IN

TRI/BBランプ

入力信号の同期信号形式を表示します。

TRI：新規格

BB ：旧規格

INPUTスイッチで選んだ同期信号が入力されていない場合、TRI/BBランプが交互に点灯します。これは、本機内部のVCOがロックしていないことを示しています。

スイッチを切り換えるか、INPUTスイッチで選んだ同期信号を正しく入力してください。

REF SYNC ランプ

INPUTスイッチでREF SYNCを選んでいるとき点灯します。

❷ OUT

TRI/BBランプ

OUTPUTスイッチで選択したほうのランプが点灯します。

N-COMPランプ

NONCOMP/COMP 切り換えスイッチでNONCOMPを選んでいるとき点灯します。

❸ OFF LINEランプ

入力信号のフィールド周波数が59.94Hzのとき点灯します。

また、入力信号のフィールド周波数に機器内部のVCOがロックしていないとき、点滅します。

1-4. 接続

入/出力用のケーブル1組(映像3本、基準同期1本)は、遅延時間を合わせるため、同じ長さのものを使ってください。

(例1) 旧規格VTRによる録画／再生のとき

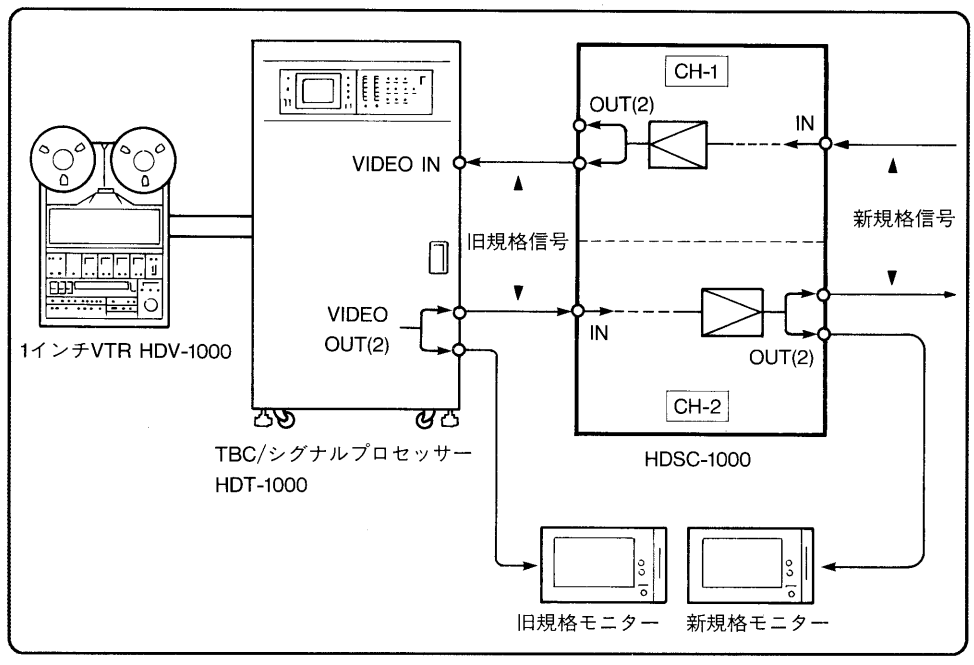

(例2) 旧規格カメラで撮影するとき

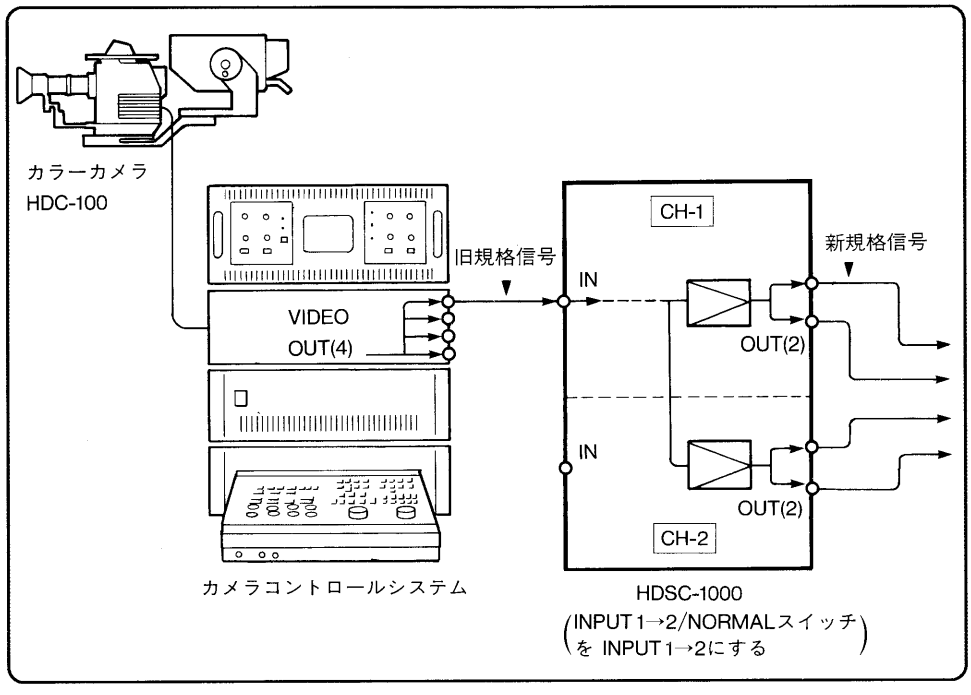

1-5. 新・旧規格の同期位相関係

新規格信号と旧規格信号の水平同期位相関係［単位：μsec］

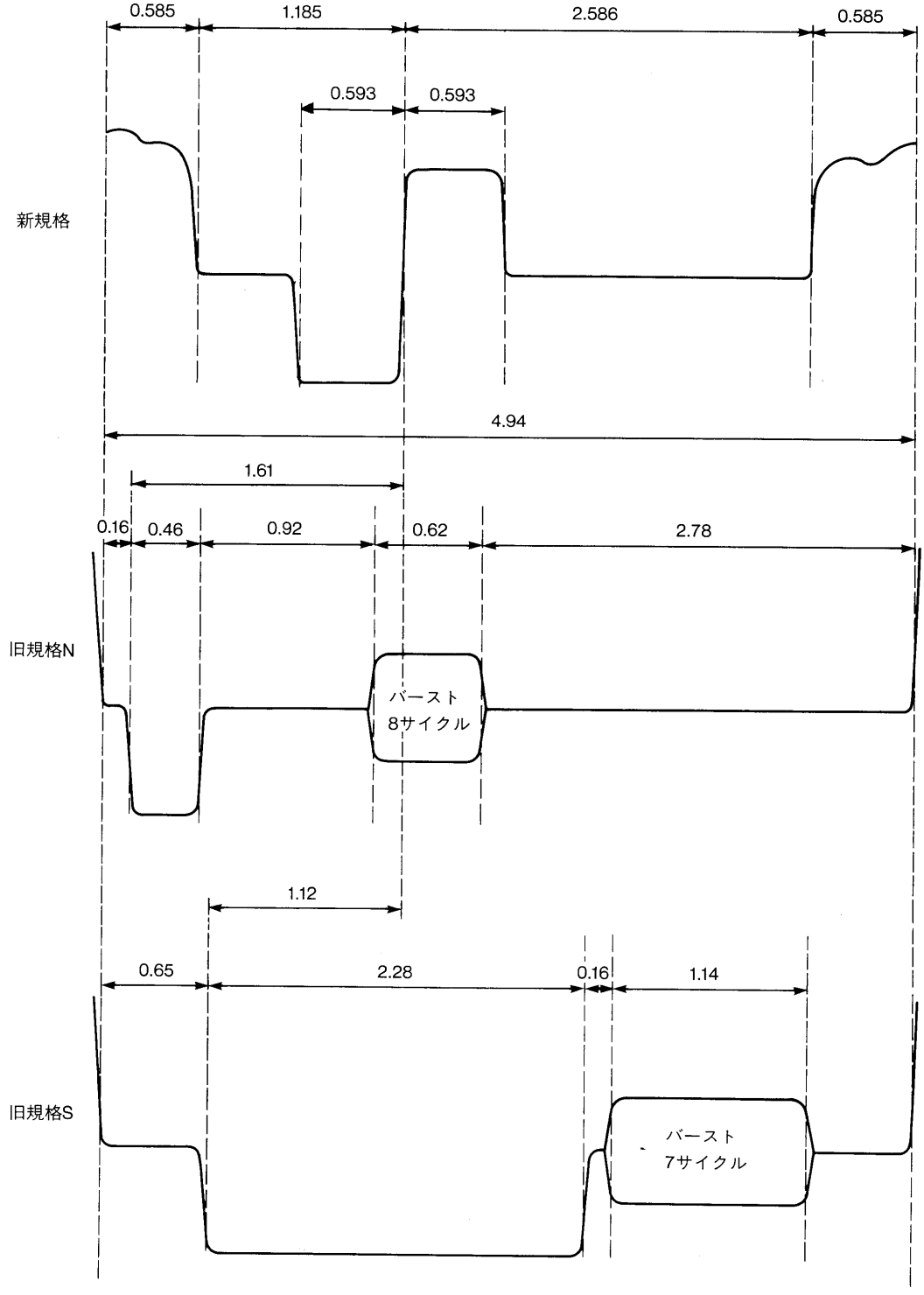

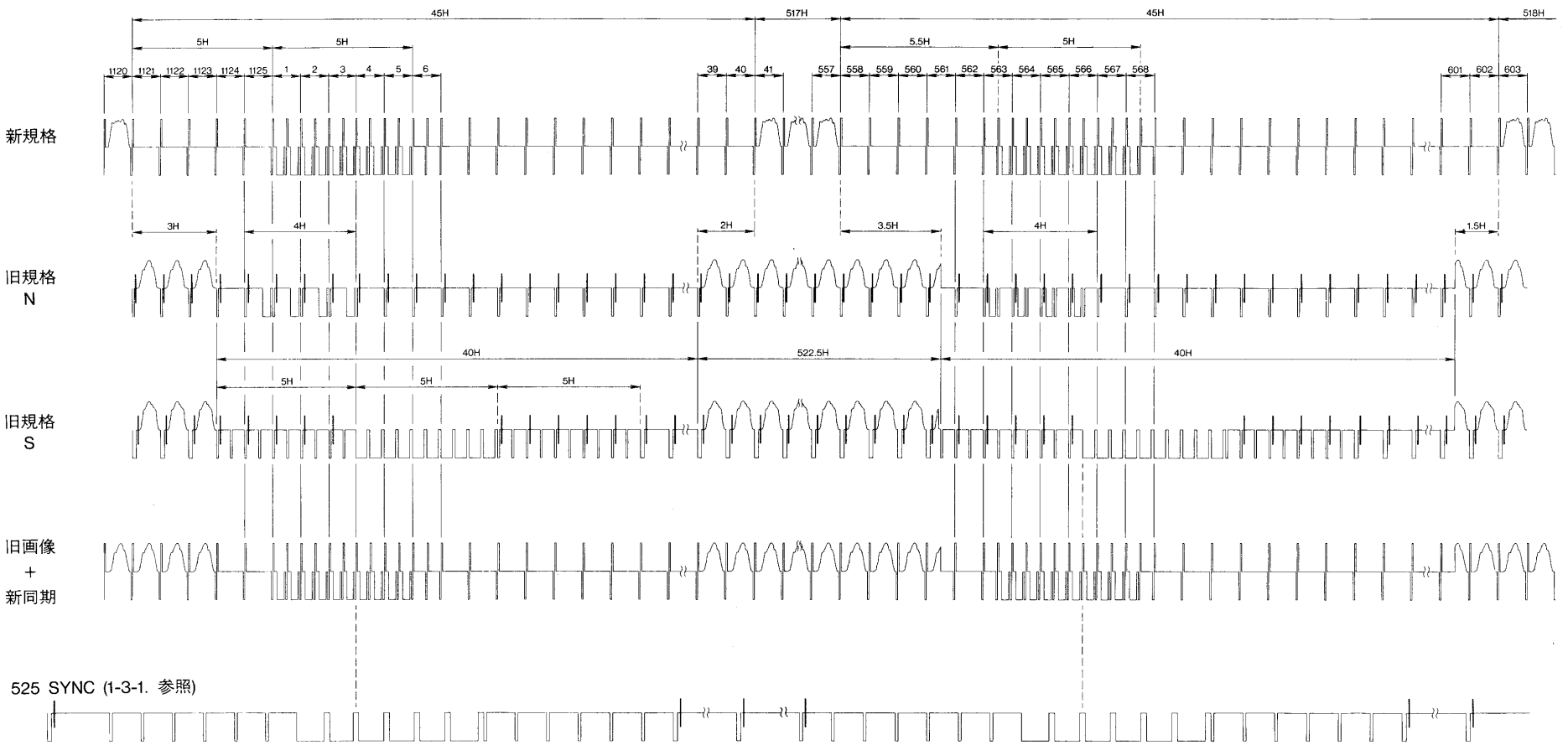

新規格信号と旧規格信号の垂直同期位相関係

SECTION 1 OPERATION

1-1. Outline

A new standard for 1125/60 high definition television broadcasting system has recently been set up by the BTA (Broadcasting Technology Association) and the SMPTE (Society of Motion Picture and Television Engineers). Sony Corporation intends to respect the new standard from now on.
The sync signal system required by the new standard is called the "tri-level bipolar sync signal," which is different from those required by the two preceding HDTV standards. So it is impossible to "directly" interconnect new standard HDTV equipment and a unit of preceding standard format to use them combinedly.
The HDSC-1000 HD sync converter converts the new standard format of synchronizing signal into the desired one of the preceding standard formats and vice versa, thus making it possible to operatively interconnect new and preceding standard equipment.

1-1-1. Features

Two sync converter channels

The HDSC-1000 contains two sync converter channels which can operate independently from each other. Both converter channels convert the sync format of an input HDTV signal into other format, and give an output signal which is different from the input signal only in sync format. Conversion is possible in two directions: from new format to preceding one, and vice versa.
The HDSC-1000 unit is provided with two output connector groups for each channel.

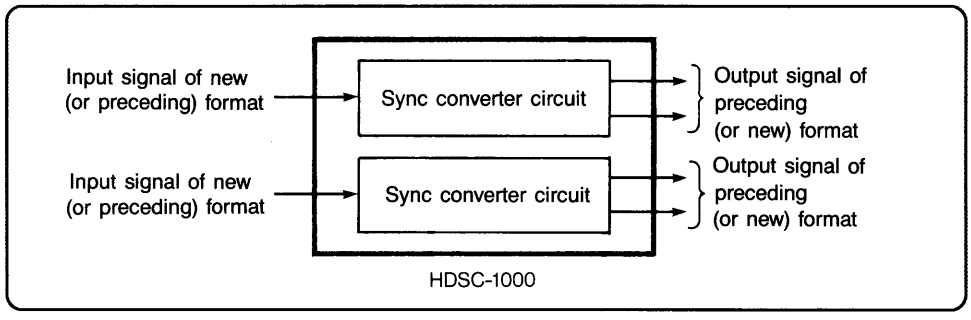

Operative in 1-input/4-output mode

The HDSC-1000 can be used as a 1-input/4-output sync converter unit by manipulating a selector switch provided on the front panel (the INPUT 1→2/NORMAL switch). The unit can also be used as a 1-input/4-output video distributor by putting it in the mode in which sync conversion is disabled.

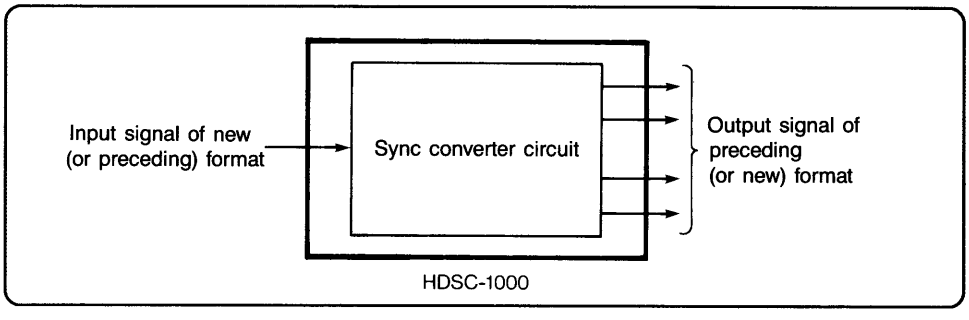

Automatic format checking

The HDSC-1000 automatically checks whether the input signal is of new or preceding format, and indicates the check result.
Additionally mounting a VCO (Voltage Controlled Oscillator) block in the HDSC-1000 will enable the unit to automatically distinguish between the two field frequencies and make the VCOs be locked to the respective field frequencies.

Other functions

- The HDSC-1000 can give an output signal without sync signal.
- Either sync signal inserted in the input video signal or reference sync signal can be used to lock the VCO.
- The unit is provided with an output connector for 525-line format reference sync signal.

1-1-2. Three Different HDTV Signal Formats

In this operation manual, the three HDTV signal formats are referred to as "new format," "preceding format N," and "preceding format S," respectively. (See the table below). For details of the sync waveforms and the sync phase relationships among the three formats, refer to 1-5. "Sync Phase Relationships between New and Preceding Formats."

New format	Sync signal: Field frequency: Aspect ratio: Video signal:	Tri-level bipolar 60.00 Hz 16:9 G, B, R or Y, P_B, P_R	Horizontal sync signal waveform: 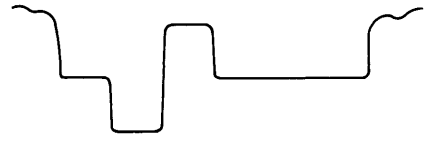
Preceding format N	Sync signal: Field frequency: Aspect ratio: Video signal:	Formatted conforming to the "International Exposition/ Tsukuba" standard 59.94 Hz 5:3 Y, C_W, C_N	Horizontal sync signal waveform: 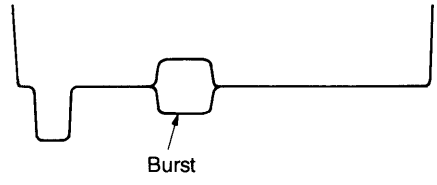
Preceding format S	Sync signal: Field frequency: Aspect ratio: Video signal:	Formatted conforming to Sony's signal generator standard 60.00 Hz 5:3 G, B, R	Horizontal sync signal waveform: 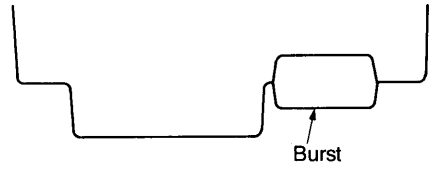

Note

Field frequency conversion and/or video signal matrix conversion may be required depending on the specifications of the equipment to be connected to the HDSC-1000.

1-1-3. Preliminary Setting

Connecting preceding format S equipment

When connecting preceding format S equipment to the HDSC-1000, it is not necessary to mount an optional VCO (for field frequency of 59.94 Hz) in the unit nor to change the setting of the internal switch.

Connecting preceding format N equipment

When connecting preceding format N equipment to the HDSC-1000, **it is necessary to mount an optional VCO in the unit and to change the setting of the internal switch.**
In its state preset at the factory, the HDSC-1000 contains a VCO only for input signal of 60.00 Hz field frequency. So this VCO will not get locked to a signal of preceding format N because the field frequency of that signal is 59.94 Hz.
Additionally mounting an optional VCO for field frequency of 59.94 Hz enables the HDSC-1000 to handle either of input signals of preceding format S and N. That is, the standard VCO (the VCO provided in the unit as a standard component) or the optional VCO will get locked to the field frequency (60.00 or 59.94 Hz) of the input signal following the result of automatic format checking by the unit.
The internal switch to select preceding format S or N for output signal format has been factory-set to format S. Therefore, when preceding format N is desired as output signal format, it is necessary to change the internal switch position to format N.
For details of the internal switch setting procedure, refer to Section 2 "INSTALLATION."
When you desire to mount an optional VCO in your HDSC-1000 unit, please contact your Sony dealer.

1-2. Specifications

General

Power requirements	100 to 120V AC ±10% or 220 to 240V AC ±10% (selectable)
Power frequency	50/60 Hz
Power consumption	100W
Operating temperature	0°C to 40°C (32°F to 104°F)
Storage temperature	−10°C to +60°C (14°F to 140°F)
Humidity	10 to 90% (without condensing)
Weight	9.5 kg (20 lb. 15 oz.)
Dimensions	424 x 88 x 515 mm (w/h/d) ($16\frac{3}{4}$ × $3\frac{1}{2}$ × $20\frac{3}{8}$ inches)
Video bandwidth	0 to 30 MHz ±0.5 dB
Video I/O level allowance	±1%
Video delay time	20 nsec ±5 nsec
Sync conversion precision	Standard value ±20 nsec

Input connectors

VIDEO IN (CH-1/CH-2)	
G, B, R or Y, P_B, P_R (or Y, C_W, C_N)	0.7 Vp-p (video, for all formats) 0.3 Vp-p ±3 dB (sync, for preceding format) ±0.3 V ±3 dB (sync, for new format) 75 ohms, unbalanced
SYNC	0.3 Vp-p ±3 dB (for preceding format) ±0.3 V ±3 dB (for new format) 75 ohms, unbalanced

Output connectors

VIDEO OUT 1/2 (CH-1/CH-2)	
G, B, R or Y, P_B, P_R (or Y, C_W, C_N)	0.7 Vp-p (video, for all formats) 0.3 Vp-p (sync, for preceding format) ±0.3 V (sync, for new format) 75 ohms, unbalanced
SYNC	0.3 Vp-p (for preceding format) ±0.3 V (for new format) 75 ohms, unbalanced
525 SYNC OUT	0.3 Vp-p 75 ohms, unbalanced, sync negative

Accessories

Kit parts to mount the unit in the console rack (SU-1010)
- Rack angles ..... 1 for left side, 1 for right side
- Plate nuts 2

Kit parts to mount the unit in the standard rack
- Rack angles ..... 1 for left side, 1 for right side
- +K screw (4 x 10) 4
- +B screw (4 x 12) 4

Operation and maintenance manual 1

Design and specifications are subject to change without notice.

1-3. Location and Function of Parts

1-3-1. Connector Panel

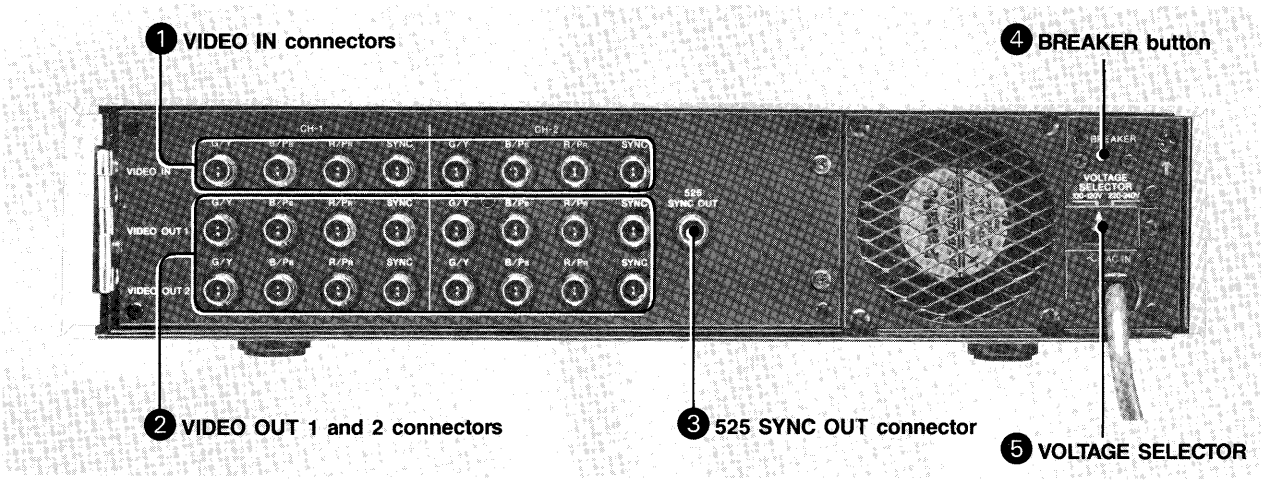

The VIDEO IN connectors ❶ and the VIDEO OUT 1 and 2 connectors ❷ are divided into two mutually independent groups, respectively: the one for CH-1 (channel 1), and the other for CH-2 (channel 2).

❶ VIDEO IN connectors (BNC type)

G, B, R signals or Y, P_B, P_R (Y, C_W, C_N) signals are input to the unit through these connectors. The SYNC connector is to be used to input a reference sync signal synchronized to the input video signal. When handling a video signal without sync signal, a reference sync signal must always be input through the SYNC connector.

❷ VIDEO OUT 1 and 2 connectors (BNC type)

A video signal with sync signal converted by the converter circuit is output through these connectors. The signals output from VIDEO OUT 1 and the VIDEO OUT 2 are identical. At the SYNC connector is output a reference sync signal synchronized to the output video signal.

❸ 525 SYNC OUT connector (BNC type)

525-line format reference sync signal is output through this connector. For phase relationships, refer to 1-5. "Sync Phase Relationships between New and Preceding Formats."
When using a 525-line format editor, the output from this connector can be used as a reference sync signal.

❹ BREAKER button

The unit contains a circuit breaker, which will automatically act to cut off the power when overcurrent flows in the circuit. When such case occurs, first check the circuit, and if you don't find any problem, then push the BREAKER button to restore the power.

❺ VOLTAGE SELECTOR

100-120V	100 to 120V AC ±10 % (90 to 132V)
220-240V	220 to 240V AC ±10 % (198 to 264V)

When you use the unit in an area where the local supply voltage is not in the range corresponding to the current setting of the VOLTAGE SELECTOR, remove the selector cover and change the setting of the selector. After changing the selector setting, be sure to put the selector cover back in its place (this time, the different tapped hole from the previous one is to receive the set screw).

1-3-2. Control Panel

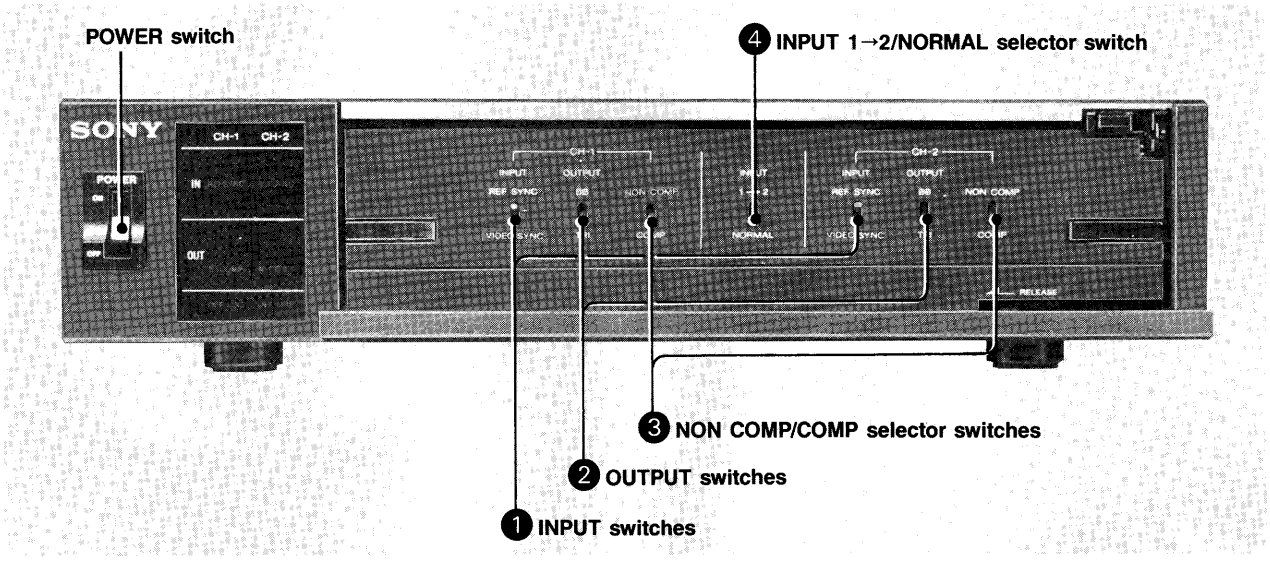

The switches ❶, ❷, and ❸ are provided in pair; one switch of each pair is for CH-1 and the other for CH-2, respectively. When using both channels, it is necessary to set each pair of switches to the desired position independently.

❶ INPUT switch

This switch is used to select the signal to lock the VCO.

REF SYNC: The reference sync signal to be input to the SYNC connector.

VIDEO SYNC: The sync signal of the input video signal.

(Of the three input video signals, use the one which is input to the leftmost VIDEO IN connector, namely the G/Y connector).

❷ OUTPUT switch

This switch is used to select the sync signal format for the output signal.

BB (black burst): One of the preceding formats.

(The internal switch has been factory-set to the preceding format S. For the procedure to change the internal switch setting, refer to Section 2 "INSTALLATION").

TRI (tri-level): New format.

❸ NON COMP/COMP selector switch

NON COMP (non-composite): The switch position not to insert a sync signal in the output signal.

COMP: The switch position to insert a sync signal in the output signal.

❹ INPUT 1→2/NORMAL selector switch

INPUT 1→2: The switch position to use the HDSC-1000 as a 1-input/4-output sync converter.
When the switch is set to this position, the VIDEO IN connectors to be used must be those for CH-1, and it is necessary to disconnect the input video signal cables from the VIDEO IN connectors for CH-2.

NORMAL: The switch position to use both of the two 1-input/2-output sync converter channels of the HDSC-1000.

Note

When using only one channel, set the switch to the INPUT 1→2 position and connect the input signal cables to the VIDEO IN connectors for CH-1.

Connecting format N equipment to the output side of the unit

The standard on the format N requires that sync signal be not inserted in C_W and C_N signals and that only burst signal be inserted. However, when the HDSC-1000 is put in the mode in which it outputs a format N signal, it actually gives an output with both burst and sync signals inserted in C_W and C_N signals (see the diagram below). If the connected format N equipment will not properly operate, set the NON COMP/COMP selector switch ❸ to the NON COMP position and use the output from the SYNC connector as sync signal.

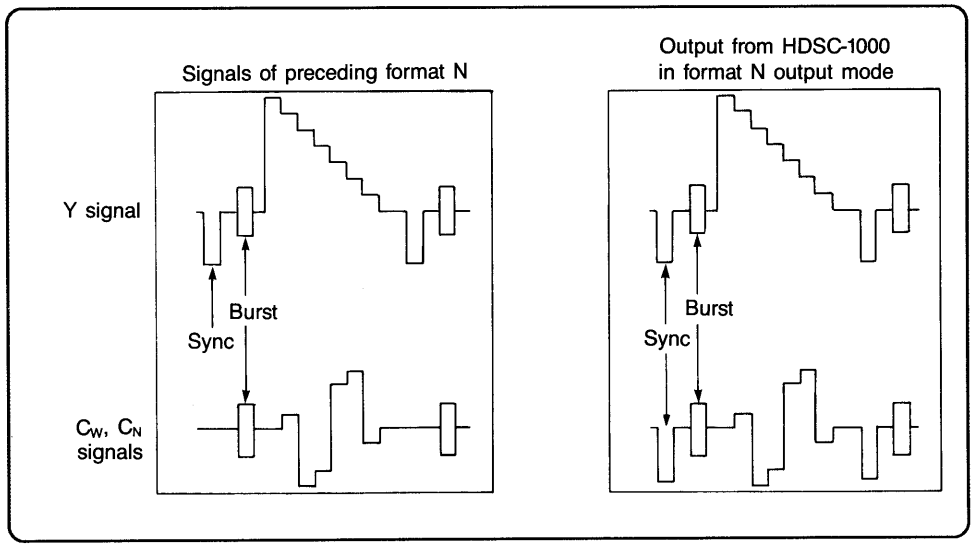

1-3-3. Indicator Lamp Section

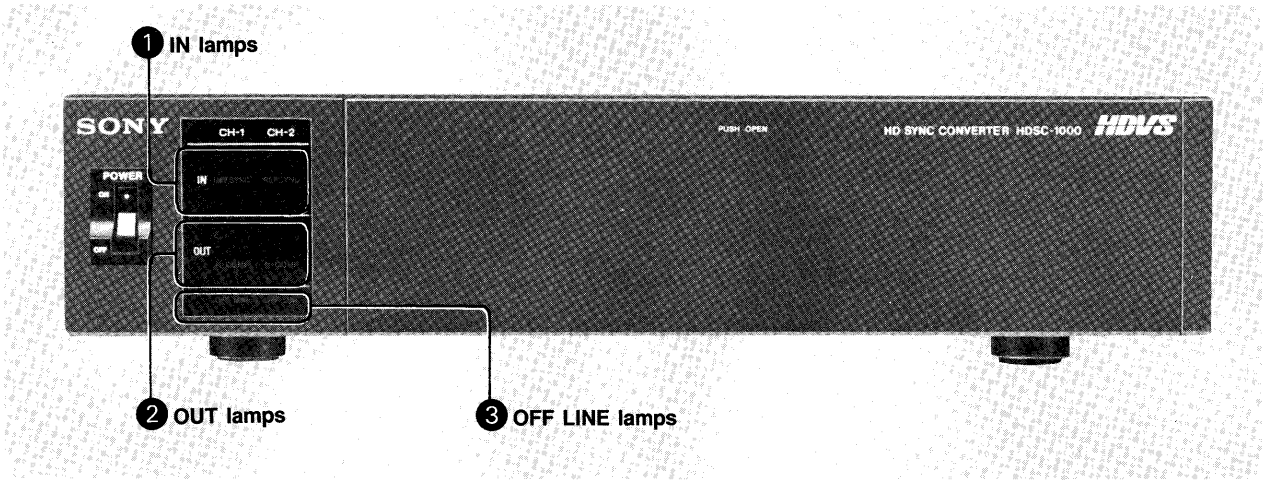

The indicator lamps ❶, ❷, and ❸ are provided in pair and separately for CH-1 and CH-2, respectively.

❶ IN lamps

TRI lamp and BB lamp

These lamps indicate the format of the input sync signal.

TRI: New format.

BB: Preceding format (format S or N).

If the sync signal selected by the INPUT switch is not actually being input to the unit, the TRI and the BB lamps repeatedly go on and out by turns. This indicates that the VCO in the unit is not in the locked state. If this situation occurs, change the current position of the INPUT switch or input a sync signal corresponding to the current switch position.

REF SYNC lamp

This lamp goes on when the INPUT switch is set to the REF SYNC position.

❷ OUT lamps

TRI lamp and BB lamp

The TRI lamp goes on when the OUTPUT switch is set to the TRI position, and the BB lamp goes on when the switch is set to the BB position.

N-COMP lamp

This lamp goes on when the NON COMP/COMP selector switch is set to the NON COMP position.

❸ OFF LINE lamp

This lamp goes on when the field frequency of the input signal is 59.94 Hz.

The lamp flickers when the VCO is not locking to the field frequency of the input signal.

1-4. Connection

Input and output signal cables (three video cables and one reference sync cable) need to be of the same length so that the delay time of the signal by each cable will be equal.

[Ex. 1] Connecting a preceding format VTR to the HDSC-1000

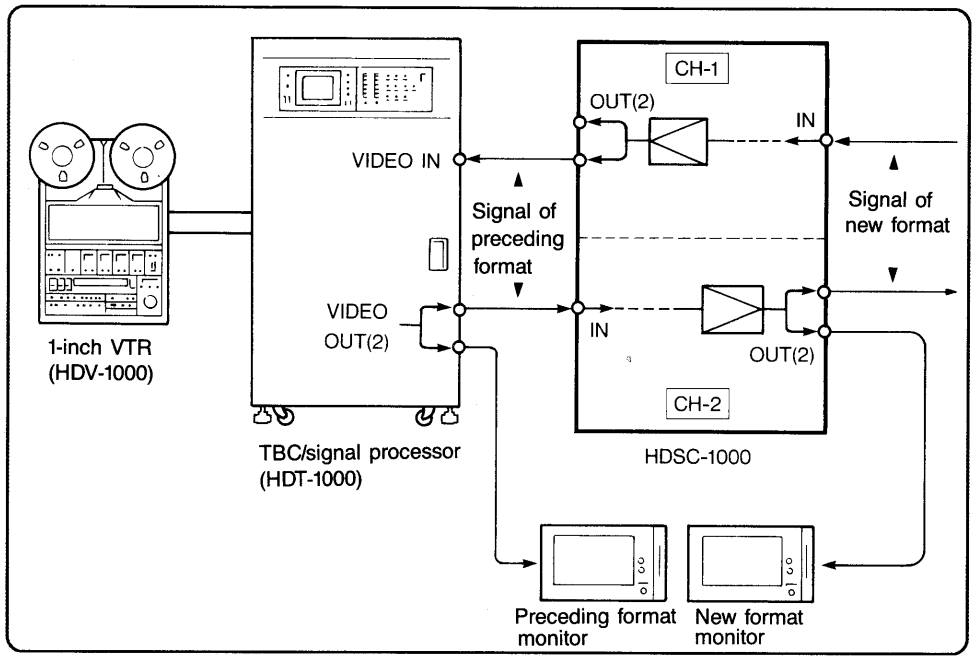

[Ex. 2] Connecting a preceding format video camera to the HDSC-1000

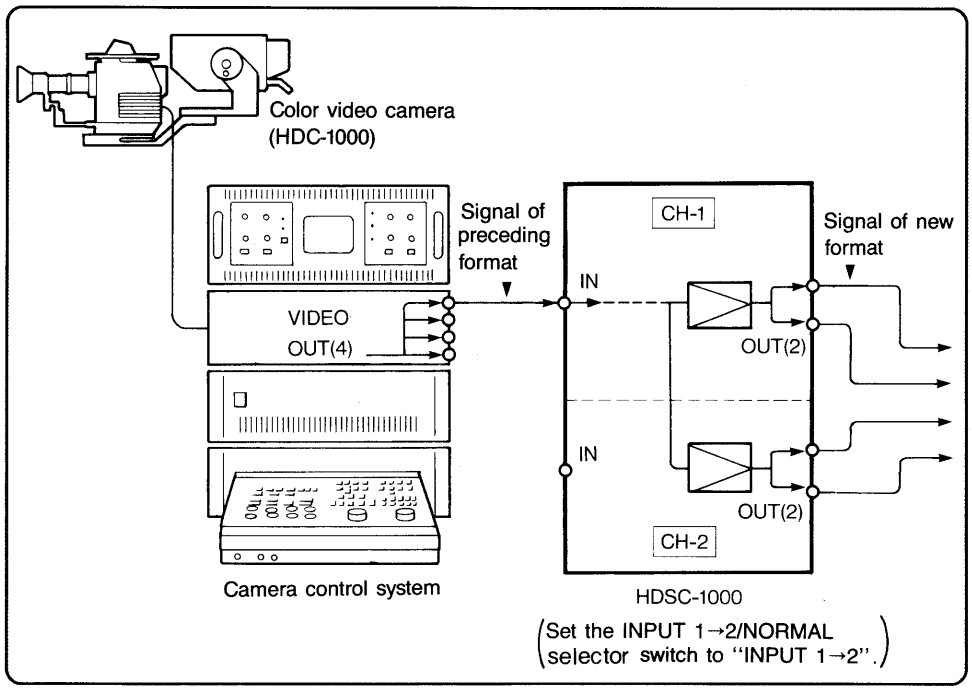

1-5. Sync Phase Relationships between New and Preceding Formats

Horizontal sync phase relationships between new and preceding format signals [unit: μsec]

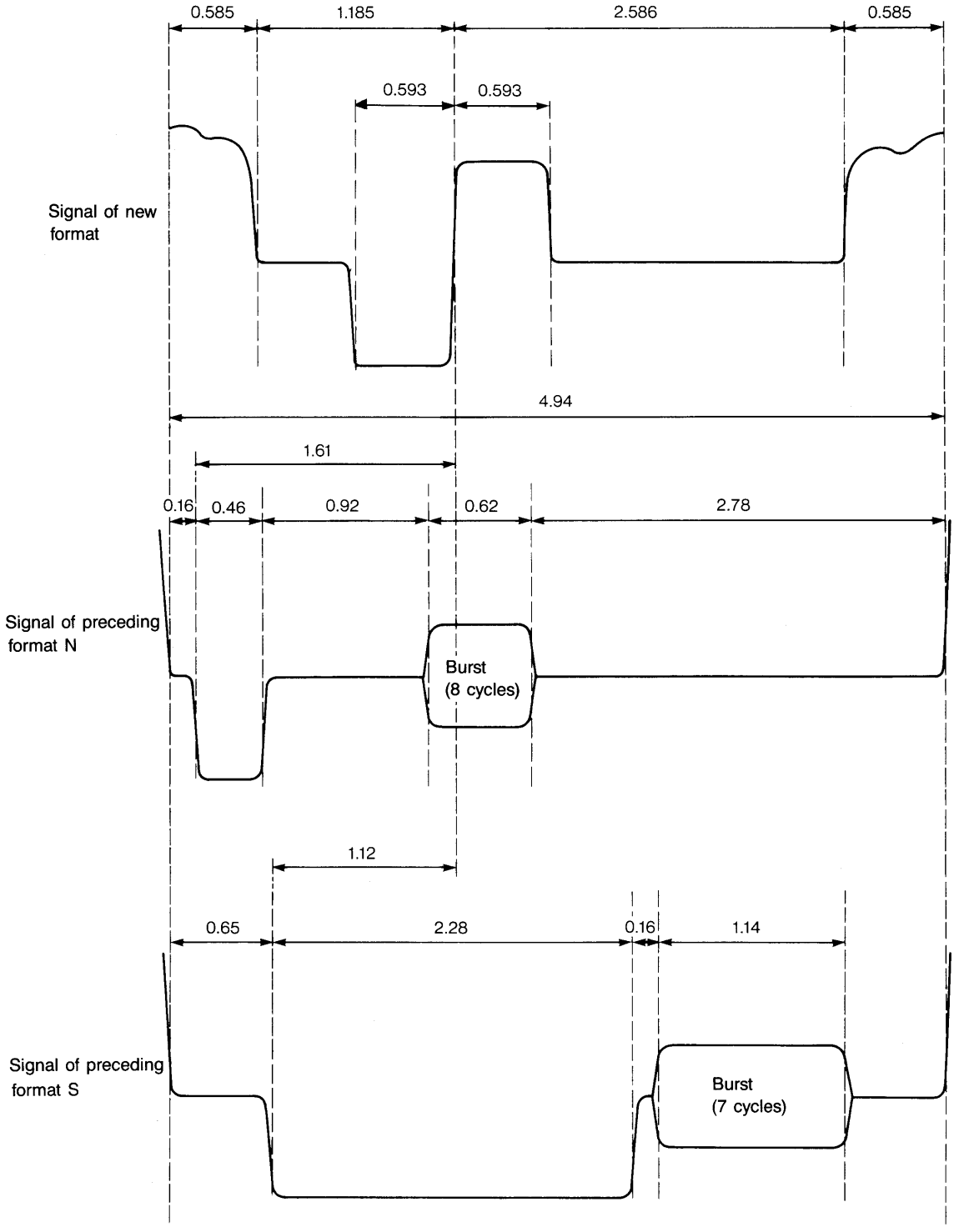

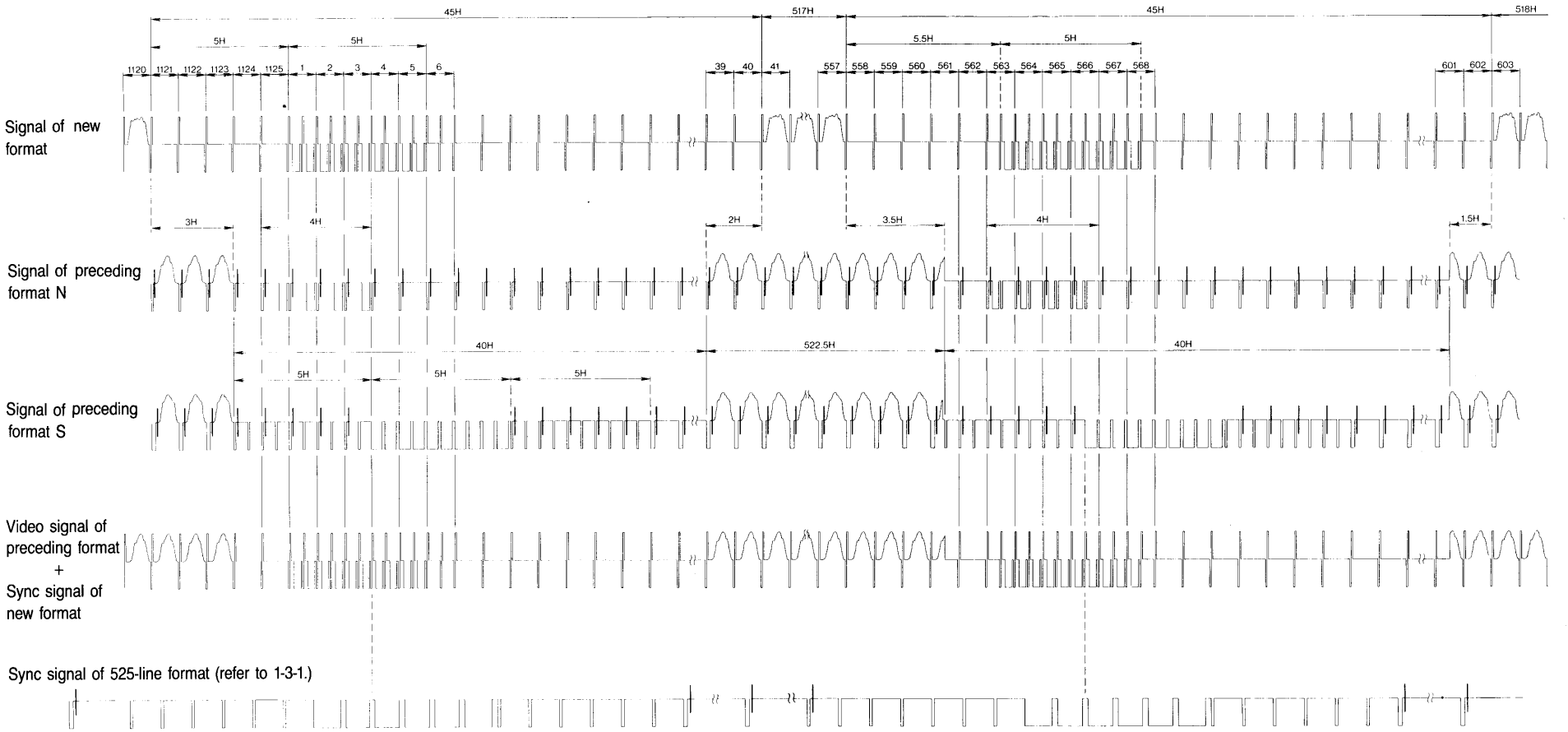

Vertical sync phase relationships between new and preceding format signals

第2章
設　置

2－1.　開梱と再梱包

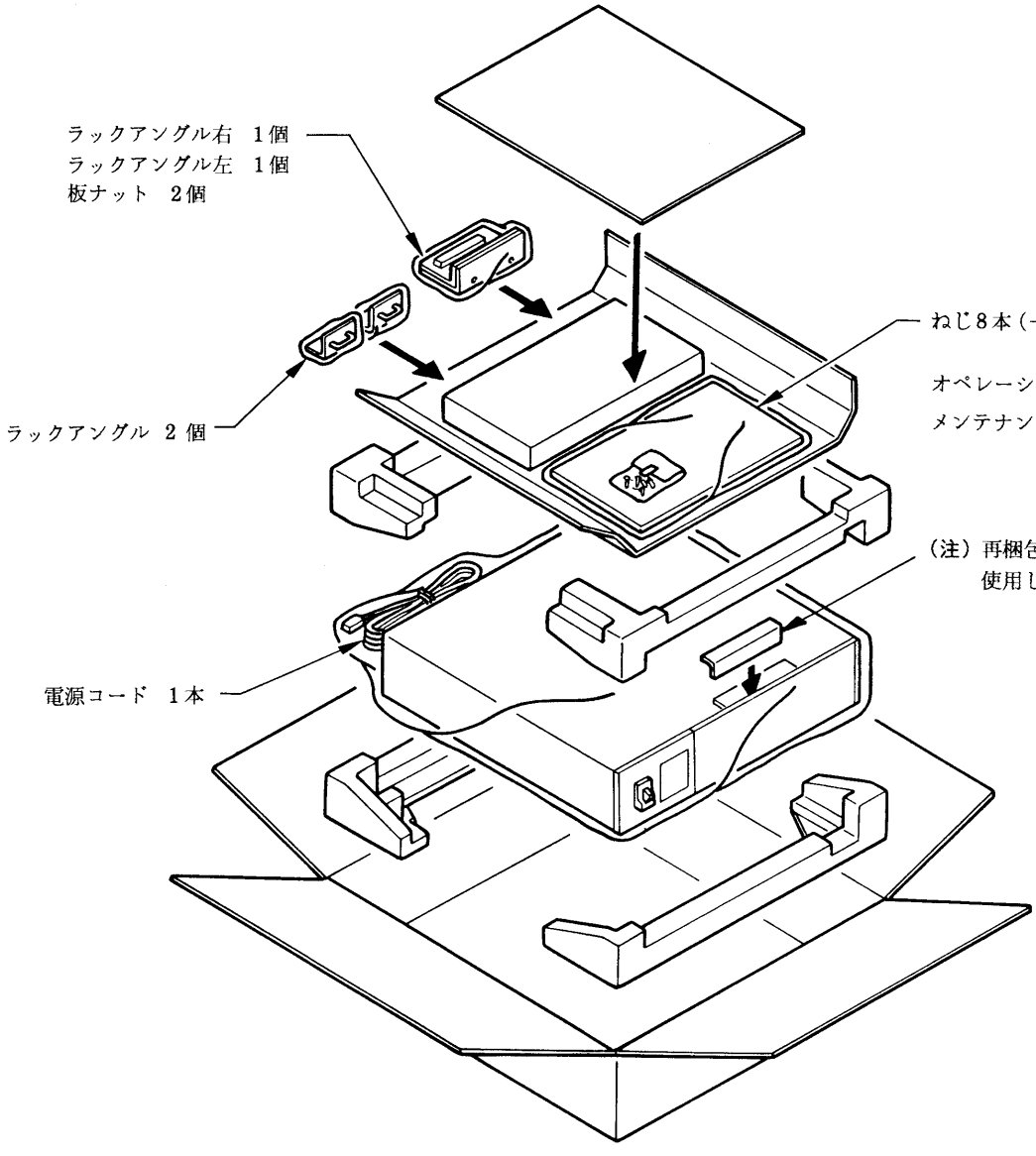

2－2. 標準付属品

ラックアングル	2個
ラックアングル左	1個
ラックアングル右	1個
板ナット	2個
ねじ B 4×12	4個
K 4×10	4個

ラック及びコンソールユニット取り付け時に必要な把手及び取り付けねじ一式

OPERATION AND MAINTENANCE MANUAL 1冊
HDSC-1000用取扱説明書及びサービスマニュアル

2－3. アクセサリー（オプション）

ラックマウント用スライドレール 2本
日本アキュライド製 モデル203
ラックマウント用ブラケット 4個
日本アキュライド製 #5507-2
HDSC-1000をラックに取り付ける時に必要なレール及び取り付け金具。なお，上記部品は直接下記メーカーから入手してください。

製造元：日本アキュライド（株）
〒572 寝屋川市日新町3-9
TEL (0720) 26-1135
〒103 東京都中央区日本橋本町2-5 協同ビル
TEL (03) 241-6908

2－4. 電源

電源電圧	AC 100-120／220-240 V切換式
100-120 Vモード	AC 90-132 V
220-240 Vモード	AC 198-264 V
電源周波数	48-62 Hz
消費電力	100 W

2－5. 設置環境

動作温度 0℃～＋40℃
保存温度 －10℃～＋60℃
湿度 10%～90%（結露状態は不可）
乾燥した風通しの良い場所に設置してください。
下記のような場所への設置は避けてください。
- 高温の部屋や熱源の近く。
- ほこりや振動の多い場所。
- 強電界や強磁界の場所。
- 太陽光線やフラッシュのような強い光が直接当る場所。

2－6. 設置スペース

2－6－1. 設置条件

1. コネクターパネルの後方に15 cm以上の空間を設けてください。
2. 裏面のファンの金網にケーブルや障害物が当らないように設置してください。
3. 電源などの発熱体の上に置かないでください。

2－6－2. 外形寸法

前面

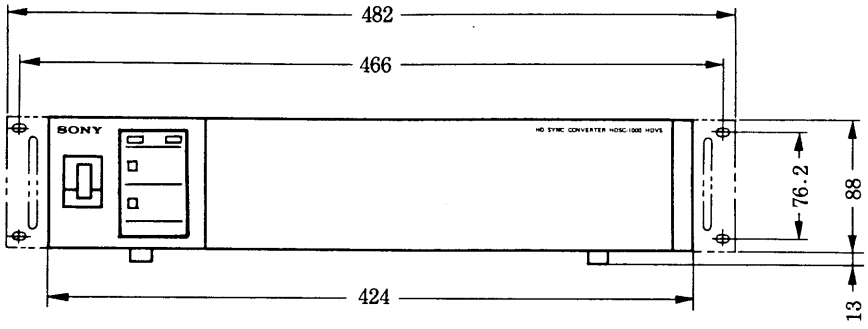

右側面

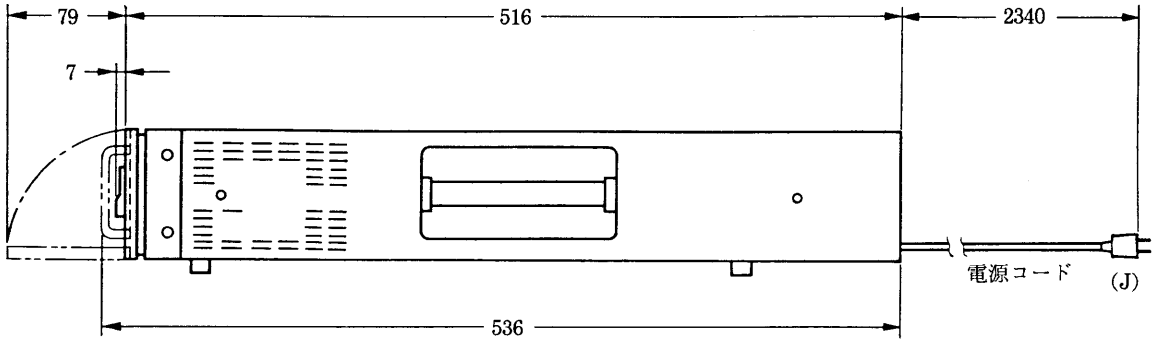

単位：mm

ラックマウント

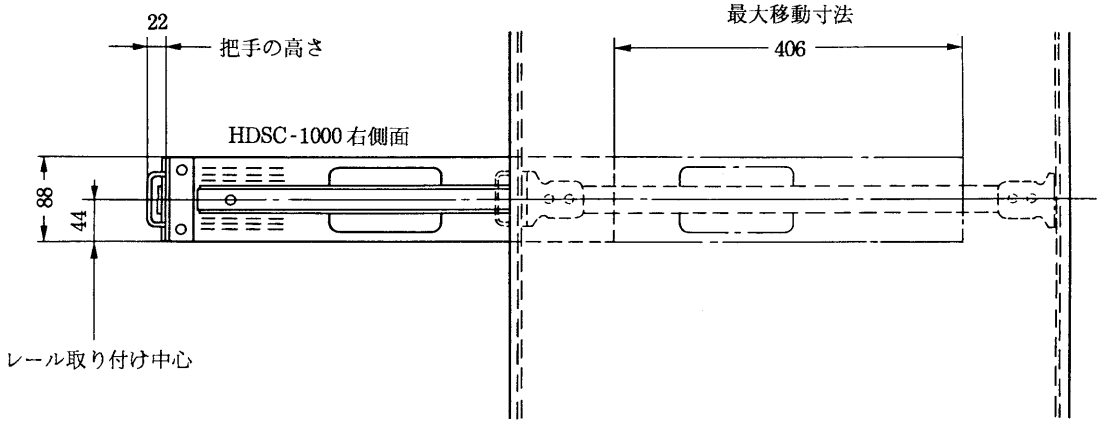

単位：mm

作業スペース

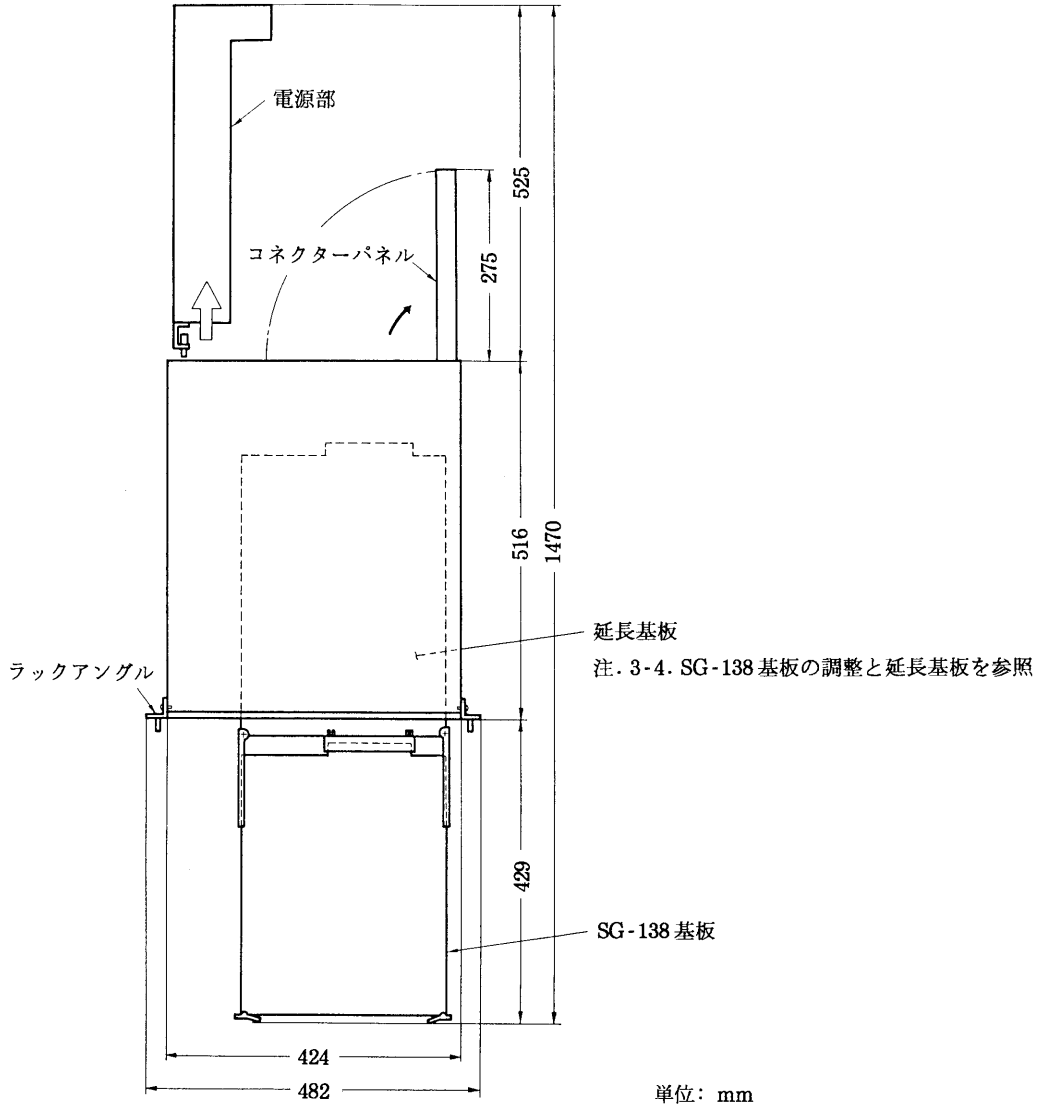

単位：mm

2−7. ラックマウントの方法

用意する部品

ラックマウント用スライドレール 1組
(インナーメンバー2本とアウターメンバー2本で構成されます。)
日本アキュライド製 モデル203 長さ22" (559 mm)

ラックマウント用ブラケット 4個
日本アキュライド製 #5507-2

スライドレールインナーメンバー取り付けねじ 4個
本体付属品 +K ×10

ラックアングル 2個
本体付属品

ラックアングル取り付け用ねじ 4個
本体付属品 B4×12

ラックマウントの手順

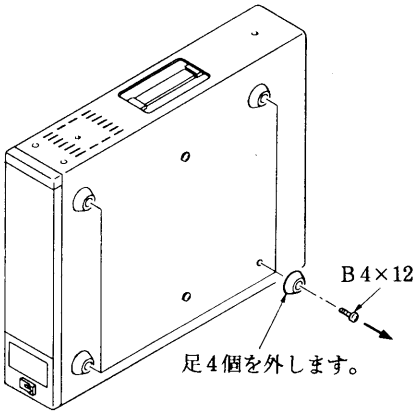

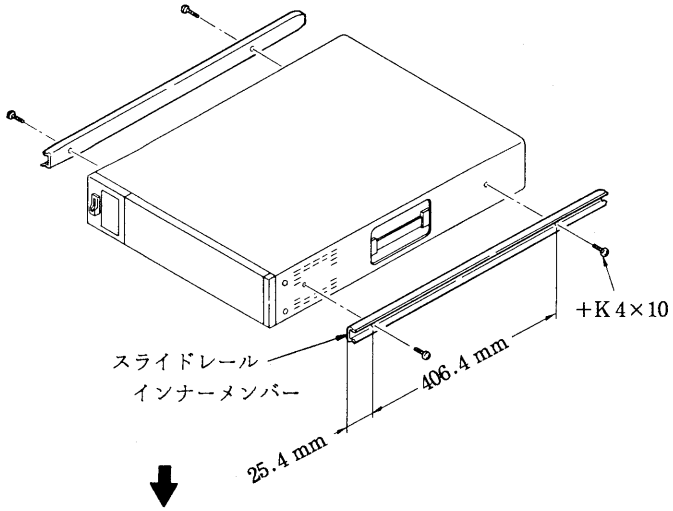

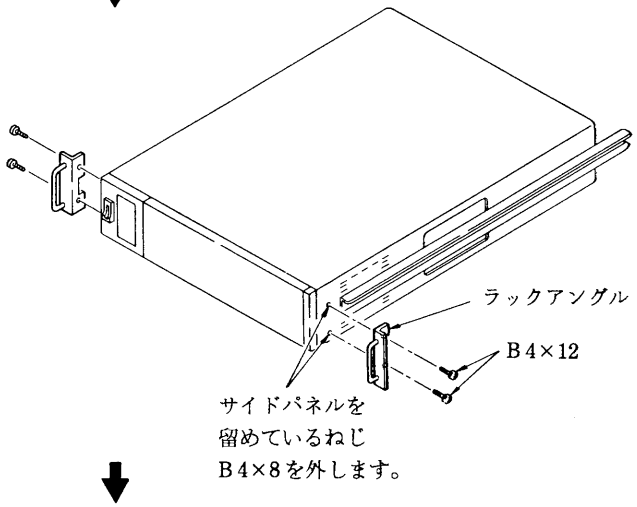

ブラケットをアウターメンバーに仮留めします。そのブラケットをラックに取り付け，ブラケットの固定ねじを締めます。

注) 固定ねじ及びラック取り付けねじは，スライドレールメーカー推奨のものを使用してください。

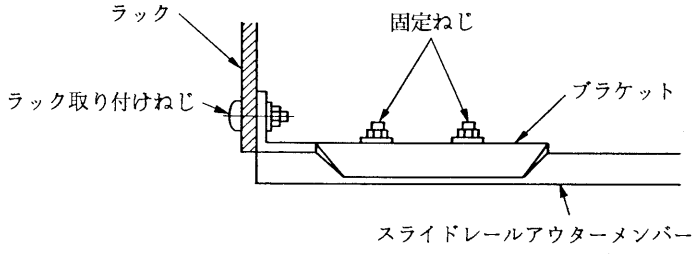

本体をラックにマウントします。

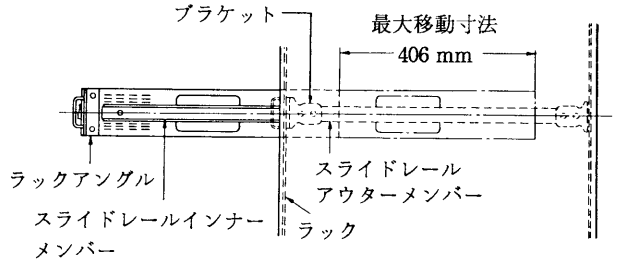

2－8. コンソールユニットSU-1010への取り付け方法

用意する部品

ラックアングル右 1個
本体付属品

ラックアングル左 1個
本体付属品

板ナット 2個
本体付属品

ラックアングル取り付け用ねじ 2個
本体付属品 B4×12

取り付け手順

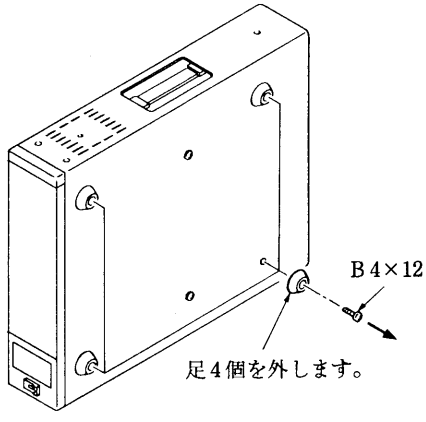

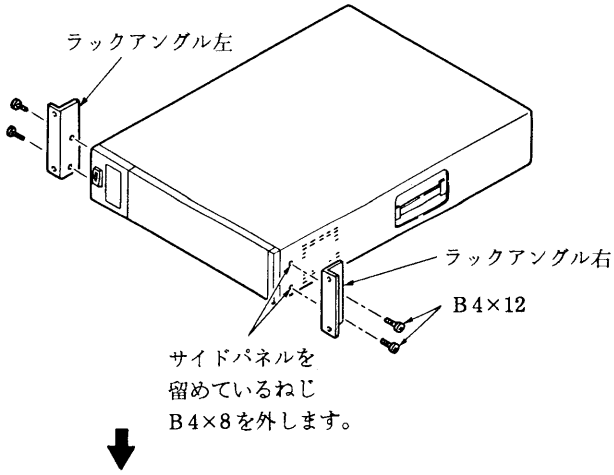

コンソールユニットのフラップドアを開けて，把手取り付け金具左及び右をねじ3個をゆるめて取り外します。

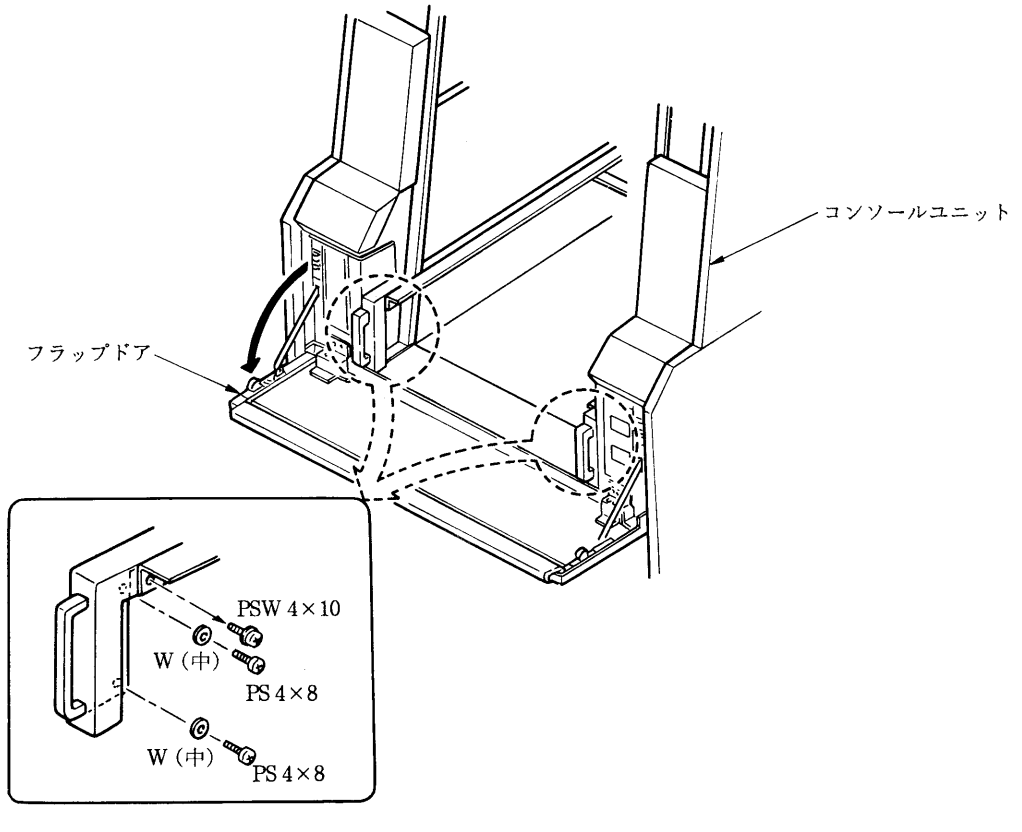

取り外した把手取り付け金具左，右から把手を取り付けているねじ (PSW 4×10) 2個をゆるめて把手を取り外します。

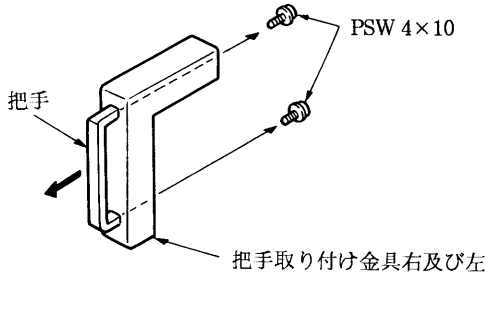

板ナットの剝離紙をはがし矢印A，B方向に寄せ，ねじ穴を把手取り付け金具のねじ穴に合せて貼付けます。

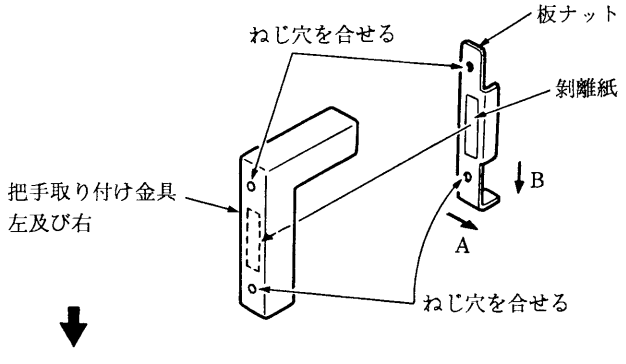

板ナットを取り付けた把手取り付け金具左及び右を取り外したねじ3個で再びコンソールユニットに取り付けます。

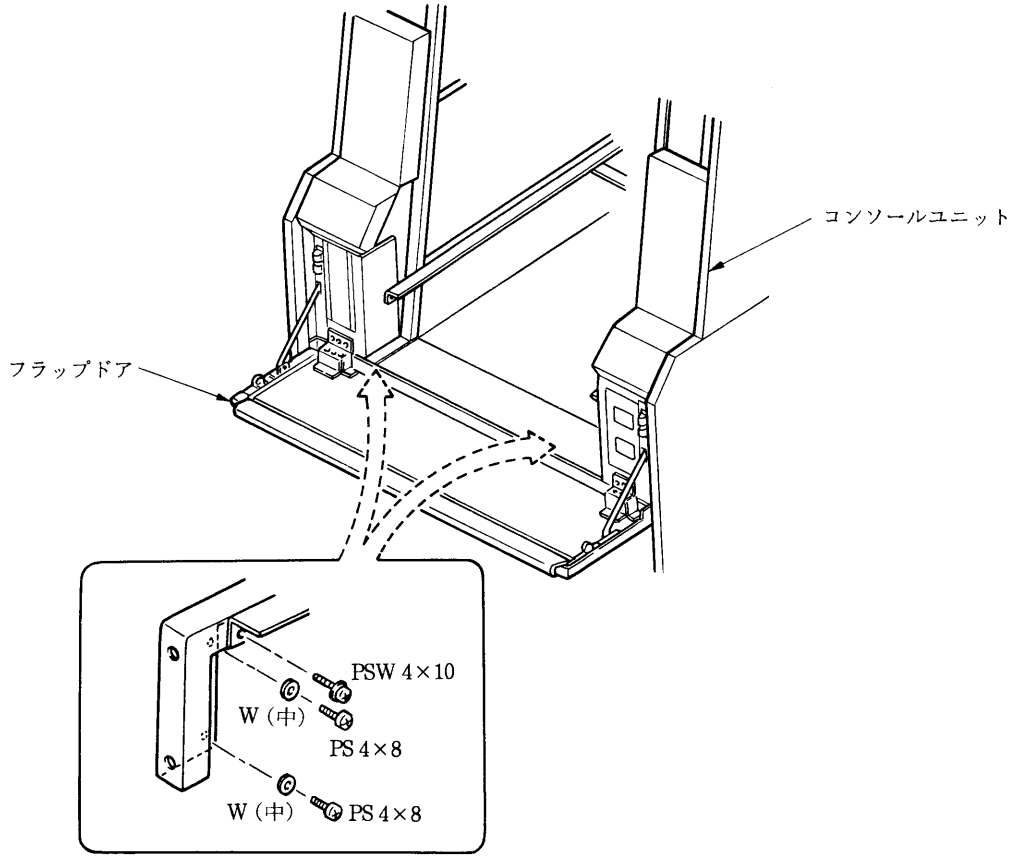

コンソールユニットにHDSC-1000を組込み，サイドパネルを留めていたねじB 4×8で留めます。

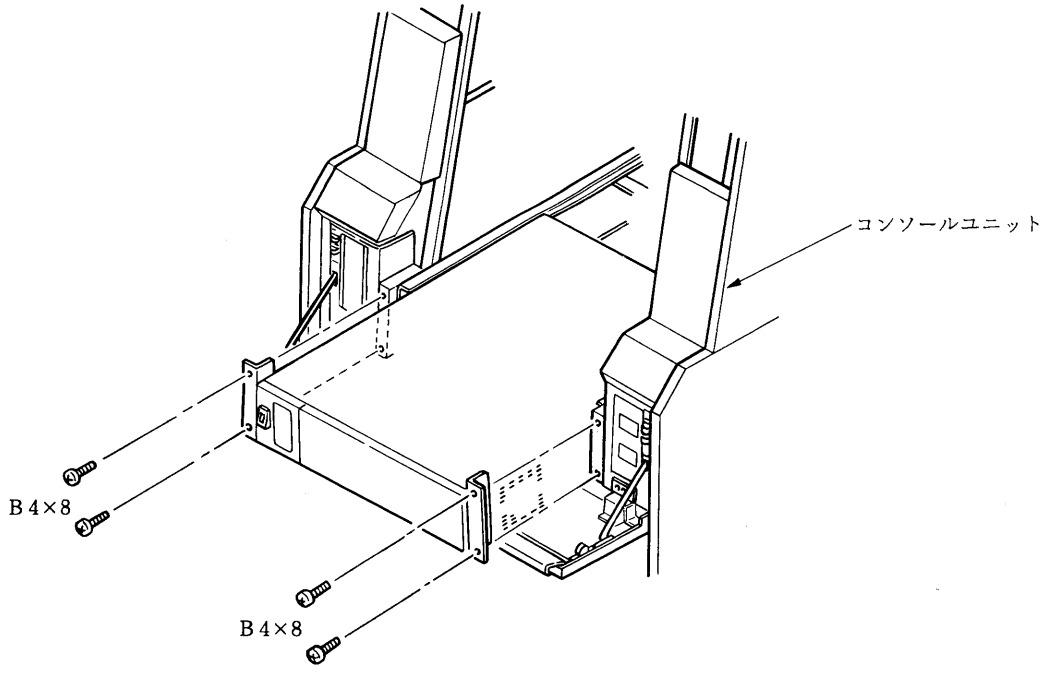

2−9. スイッチのセッティング

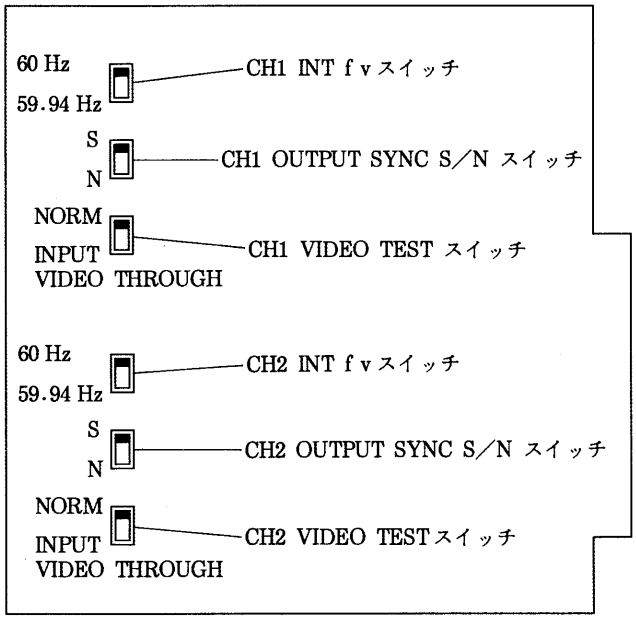

SG-138基板

INT f v スイッチ (CH1, CH2)

入力無信号時の内部フィールド周波数を60／59.94 Hzのいずれかに選択をすることができます。59.94 Hzを選択するにはVCO X1, X100, X300 (オプション) のマウントが必要です。CH1, CH2を別々に選択することが可能です。通常は60 Hzにしておきます。

60 Hz: 入力無信号時の内部フィールド周波数を60 Hzに選択します。

59.94 Hz: 入力無信号時の内部フィールド周波数を59.94 Hzに選択します。

OUTPUT SYNC S／Nスイッチ (CH1, CH2)

操作パネルのOUTPUTスイッチでBB (ブラックバースト) を選んだ場合, 旧規格信号が出力されます。この時に旧規格S又はNを選択することができます。

S: 旧規格Sを選択します。

N: 旧規格Nを選択します。

VIDEO TESTスイッチ (CH1, CH2)

出力信号を入力そのままの信号と同期信号が本機により変換された信号との選択ができます。CH1, CH2を別々に選択することが可能です。通常はNORMにしておきます。

NORM: 出力には本機により同期信号が変換された信号が出されます。

INPUT VIDEO THROUGH: 出力には入力そのままの信号が出されます。

第3章
サービス・インフォメーション

3－1. プリント基板配置図

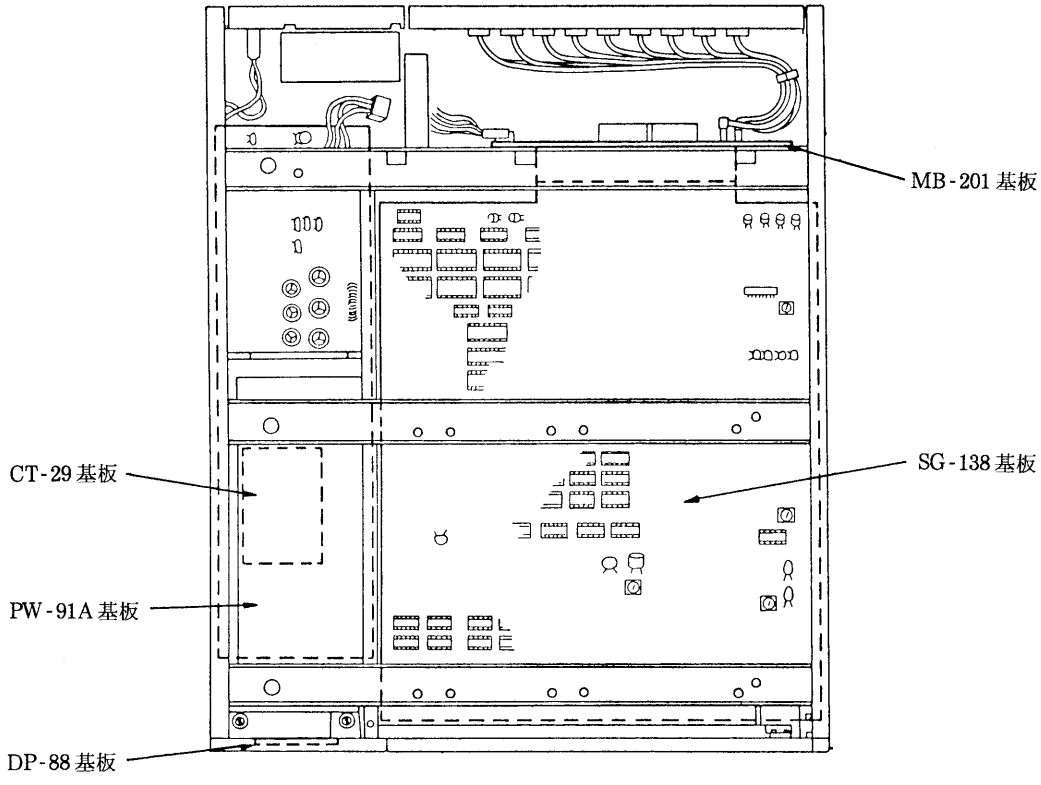

3－2. 外装取り外し

3－2－1. フロントパネル取り外し

フロントパネルの開閉は指でパネルの上面を押すと開き再度押すとロックされます。
フロントパネルは外したままでも使用出来るように着脱式になっています。
フロントパネル支えレバーを指又はドライバーの先で押し、フロントパネルを外します。

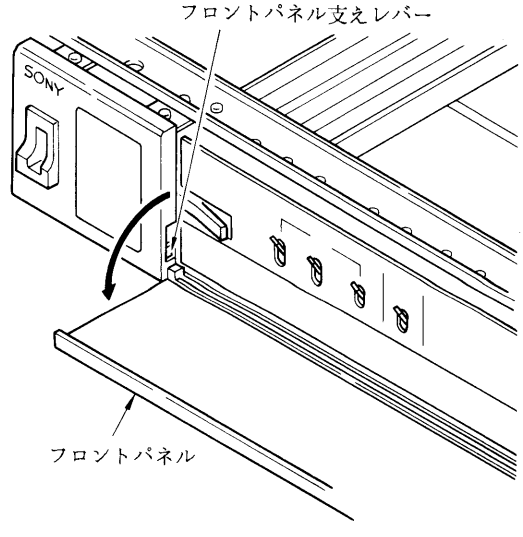

3－2－2. SG-138基板取り外し

SG-138基板取り外し

(1) ロックレバーを矢印方向に動かします。
(2) 左右の基版レバーを手前に起こします。
(3) 基板を引出します。

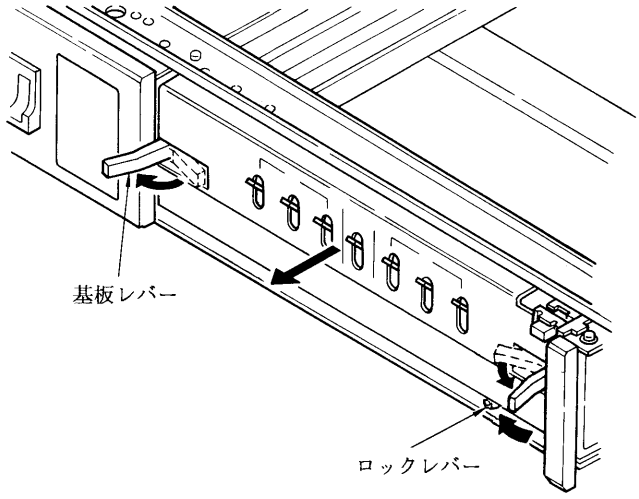

SG-138基板取り付け

(1) ロックレバーは矢印方向に動かしたままとします。
(2) 左右の基板レバーを起こした状態で基板を押し込み，
基板が止まった所で基板レバーを内側に倒します。
(3) ロックレバーを右側に戻します。

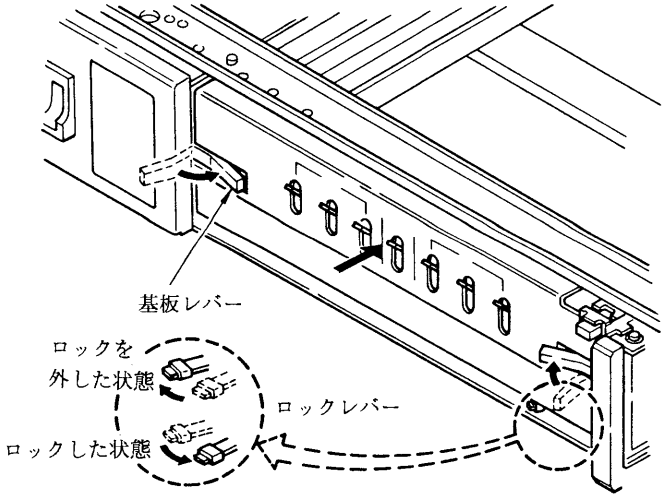

3－2－3. コネクターパネル開閉

ねじ2個をゆるめ矢印方向にコネクターパネルを開きます。

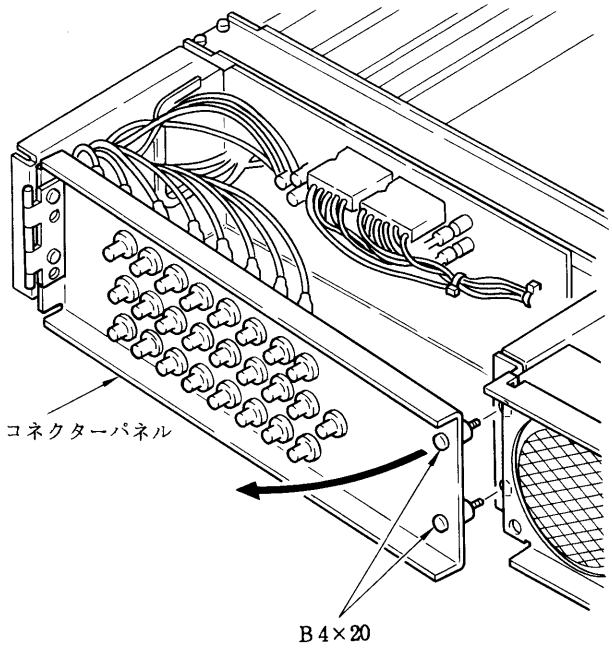

3－2－4. 側板，天板，底板取り外し

SG-138基板の調整を行なう時は取り外して調整します。

側板，天板取り外し

(1) 側板を留めているねじB 4×6（左右各2個）を外し，側板を矢印方向に動かしながら外します。

(2) 天板を矢印方向に引きます。

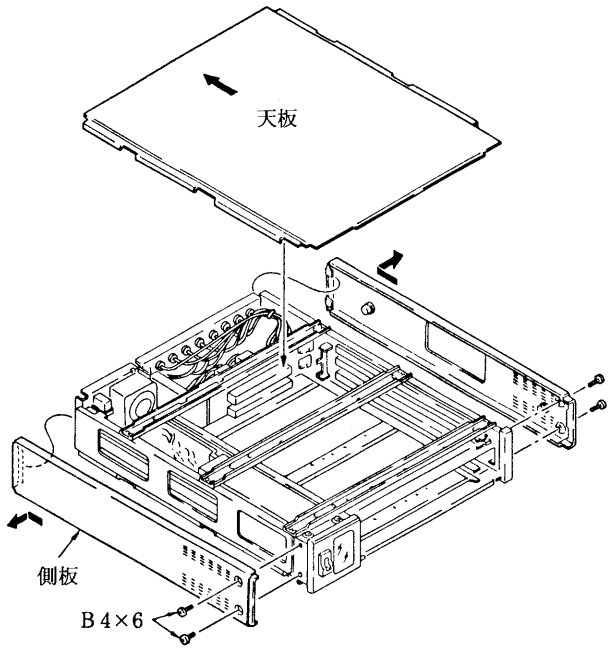

底板取り外し

(3) 足4個とねじ（B 3×6）2個を外します。

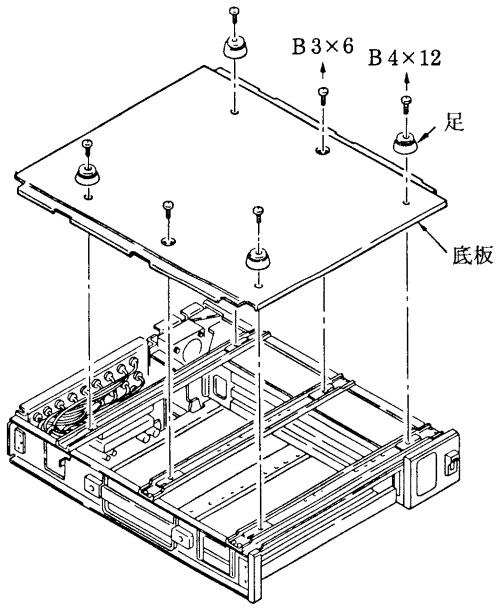

3－2－5. 表示パネル取り外し

天板及び底板を外してから下図のねじ（PSW 3×6）4個を外します。

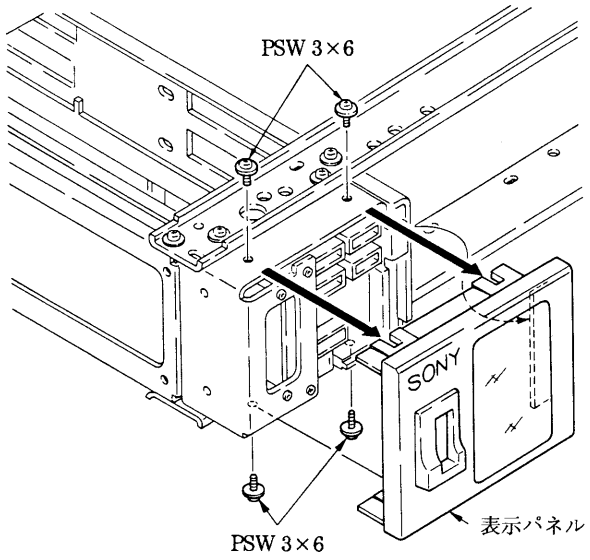

3－2－6. 電源ユニット取り外し

コネクターパネルを開けてから次の手順に従って電源ユニットを抜き出します。

(1) ねじB4×20をゆるめます。
(2) MB-201基板よりCN4，CN5及びファストン端子2個を抜きます。
(3) 配線止めをゆるめて線材を電源ユニットの方に押し込みます。

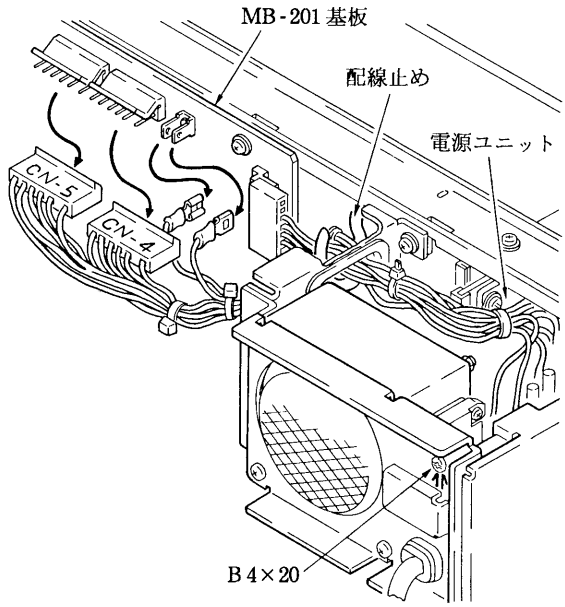

(4) 電源ユニットを矢印方向に抜き出します。

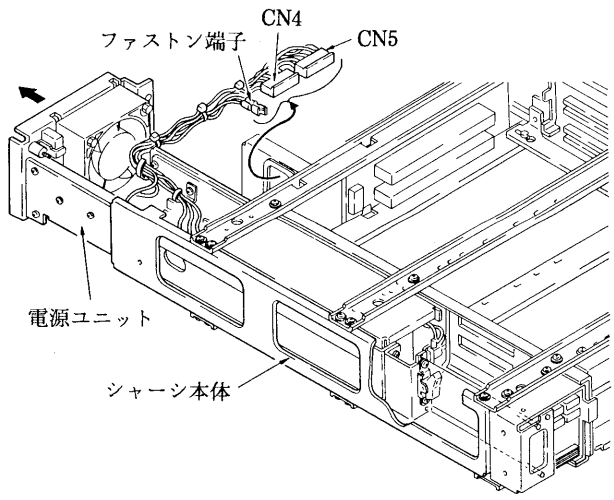

(5) 電源ユニットのチェックの仕方

上記の手順で電源ユニットを取り外してから，シャーシ本体の上に電源ユニットを乗せCN4，CN5及びファストン端子2個をMB-201基板に差し込みます。この状態で電源をONにします。

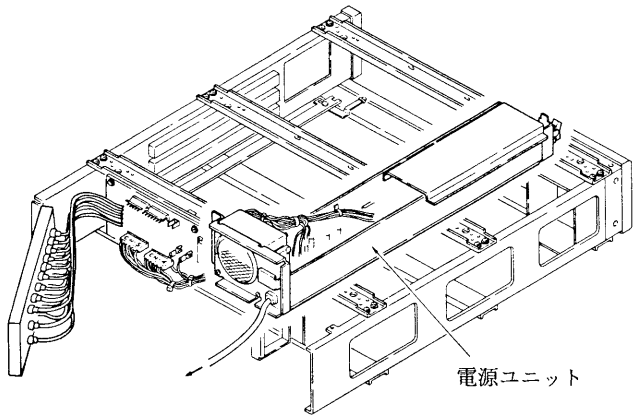

3－3. サービス上の注意事項

3－3－1. SG-138基板のロック機構

当機にはSG-138基板の脱落防止のためのロック機構が付いています。
ロックレバーを左に動かすとリリース状態となり，右に戻すとロック状態となります。
基板の着脱を行なう時は必ずロックを解除してから基板レバーを操作してください。3-2-2.“SG-138基板取り外し”の項参照。

3－3－2. 電源ユニットの注意事項

(1) 当機の電源はスイッチングレギュレーターで構成されているので電源回路のかなりの部分が1次側であり，感電に注意を要します。下図に示すカバーで覆われている部分が1次側です。

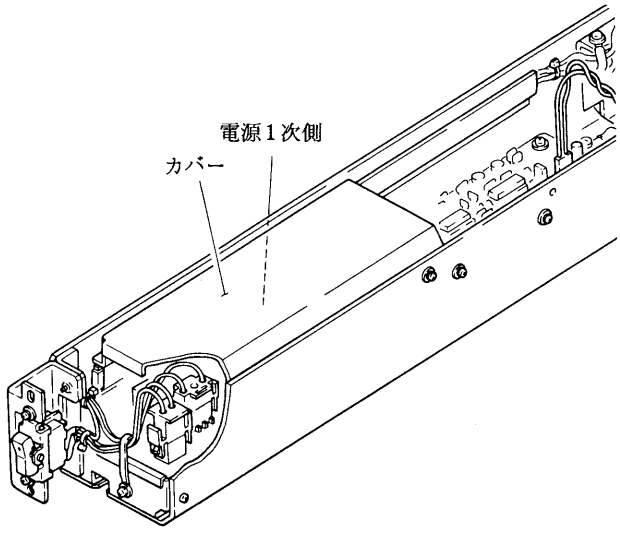

(2) 電源スイッチを切ってもしばらくはコンデンサーに電荷が残っているため感電の危険があります。電源を切った後も約1分間は感電に注意してください。
(3) 電源単体を無負荷で動作させると電源が故障する恐れがあるので必ずMB-201基板にCN4，CN5及びファストン端子2個を接続した状態でチェックを行ってください。
(4) 電源電圧セレクターをAC 100-120 Vにセットした状態で誤ってAC 220-240 Vに接続した場合は，ブレーカーが動作します。
(5) AC入力電圧が規定より低い場合は始動しないことがあります。例えば電源電圧セレクターをAC 220-240Vにセットした状態で，誤ってAC 100-120 Vを接続した場合は始動しません。
(6) 動作中に異常が起きた場合，電源は発振を停止し，再度電源スイッチを入れ直さない限り復帰しません。再度入れ直す時は1分以上間をおいてください。

3－3－3. 角型固定インダクターの取扱い注意

下記の角型固定インダクターは外見上可変インダクターに似ていますが基板にマウントされているもの及び補修用部品を含めてすべて工場にて調整済みなので現場での調整は絶対に行なわないでください。

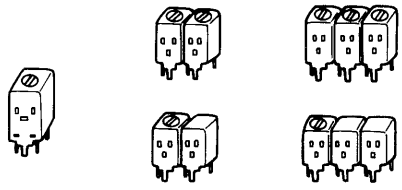

3－3－5. 補修用部品注意事項

(1) 安全重要部品

回路図，分解図，電気部品表中、⚠ 印及び ▒ で囲まれた部品は安全性を維持するために重要な部品です。これらの部品を交換するときには必ず指定の部品と交換してください。

(2) 部品の共通化

ソニーから供給される部品はセットに実装されているものと異なることがあります。これは部品の共通化，改良等によるものです。
分解図や電気部品表には現時点での共通化された部品が記載されています。

(3)部品の在庫

部品表中SP (Supply Code) 欄に“o”で示されている部品は交換頻度が低い部品ですので在庫していないことがあり，納期が長くなることがあります。

(4)コンデンサー，インダクター，抵抗の単位

回路図，分解図，電気部品表中、特に明記したものを除き、下記の単位は省略されていることがあります。

コンデンサー；μF
インダクター；μH
抵抗　　；Ω

3－4.　SG-138基板の調整と延長基板

SG-138基板の調整は「3-2-4項 側板，天板，底板取り外し」を行って調整します。
HDSC-1000には専用延長基板はありませんが，BVT-800用の延長基板を次のように改造することにより使用することもできます。
EB-9基板（A-6252-047-A；NTSC用）の改造方法
ダイオードD1，3，4，5，を取り外します。
EB-9A基版（A-6252-050-A；PAL，SECAM用）の改造方法
ダイオードD1，3，5を取り外します。

3－5.　点検調整用信号

2チャンネルの回路を持っていることにより片側のチャンネルを信号源として使用できます。詳細は第8章シンクコンバーター調整の項参照。

第4章
回路説明

4－1. 概要

本機は，新しく決定された1125／60高精細度テレビジョン方式スタジオ規格（BTA S-001）に基づいた同期信号と，従来からあった2種類の同期信号間の相互変換を行う同期変換器です。またフィールド周波数が一致すれば2種類の旧同期信号間の相互変換も行えるようになっています。

本機は，入力同期信号にロックして必要な出力同期信号を発生するシンクジェネレーター回路と映像信号の同期信号をシンクジェネレーター出力信号に置き換えるビデオ回路を2系統持っています。その他に動作状態を示す表示回路と電源回路から構成されています。

シンクジェネレーター回路とビデオ信号回路はSG-138基板に表示回路はDP-88基板におさめられています。電源回路はPW-91A基板とCT-29基板で構成されています。

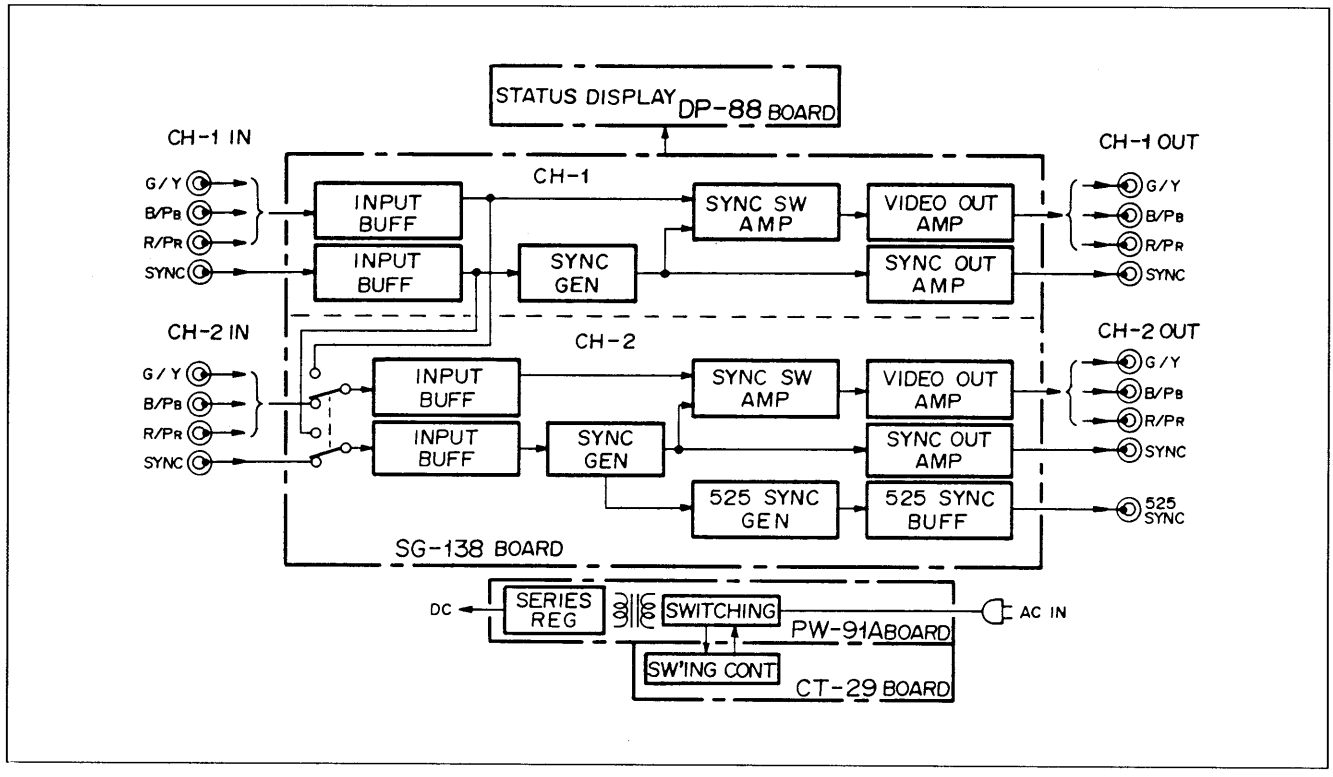

図4-1. HDSC-1000ブロック図

旧規格の筑波科学万博同期信号（以下旧規格NあるいはN同期信号とする）とソニー信号発生器規格による同期信号（以下旧規格SあるいはS同期信号とする）及び新規格の正負両極性3値同期信号の相違点を表4-1.に示します。水平位相関係を図4-2.垂直位相関係を図4-3.に示します。同期信号の変換は次のように行うことにしています。

(1) 新規格画像の左右に0.585 μsの黒信号を付加し，画像の中心は水平方向は不変とする。
(2) 旧規格の有効走査線数，1045本のうち10本は，新規格では垂直ブランキング内の過剰信号として扱う。
(3) 垂直位相関係は，新信号に対して(3.5-2)／2=0.75 Hだけ画像中心が下に移動する。

編集機用の525 SYNC出力の垂直位相関係は，ソニーHDV-1000／HDT-1000と同一です。
変換前の信号と変換後の信号のフィールド周波数は一致していなければなりません。従って旧規格Nの信号を変換する場合は信号源のフィールド周波数を60.00 Hzに変更するか，もしくはオプション設定の59.94 Hz用のVCOを本機に追加する必要があります。VCOが追加されると59.94／60.00 Hzのいずれかのフィールド周波数の入力に対しても自動的に判別し，ロックします。
本機では旧規格NのCw，CN信号内の同期信号はY信号内の同期信号と同一としました。

	旧規格N 筑波科学万博 同期信号規格	**旧規格S** ソニー信号発生器規格 による同期信号	**新規格** 正負両極性3値同期信号規格
フレーム当りの有効走査線数	1045本	1045本	1035本
水平ブランキング幅	4.94 μs	5.2 μs	3.77 μs
垂直ブランキング幅	40H	40H	45H
アスペクト比	5: 3	5: 3	16: 9
フィールド周波数	59.94 Hz	60.00 Hz	60.00 Hz
映像信号形式	Y／Cw／CN	G／B／R	G／B／RまたはY／PB／PR

表4-1. 新旧規格の相違点

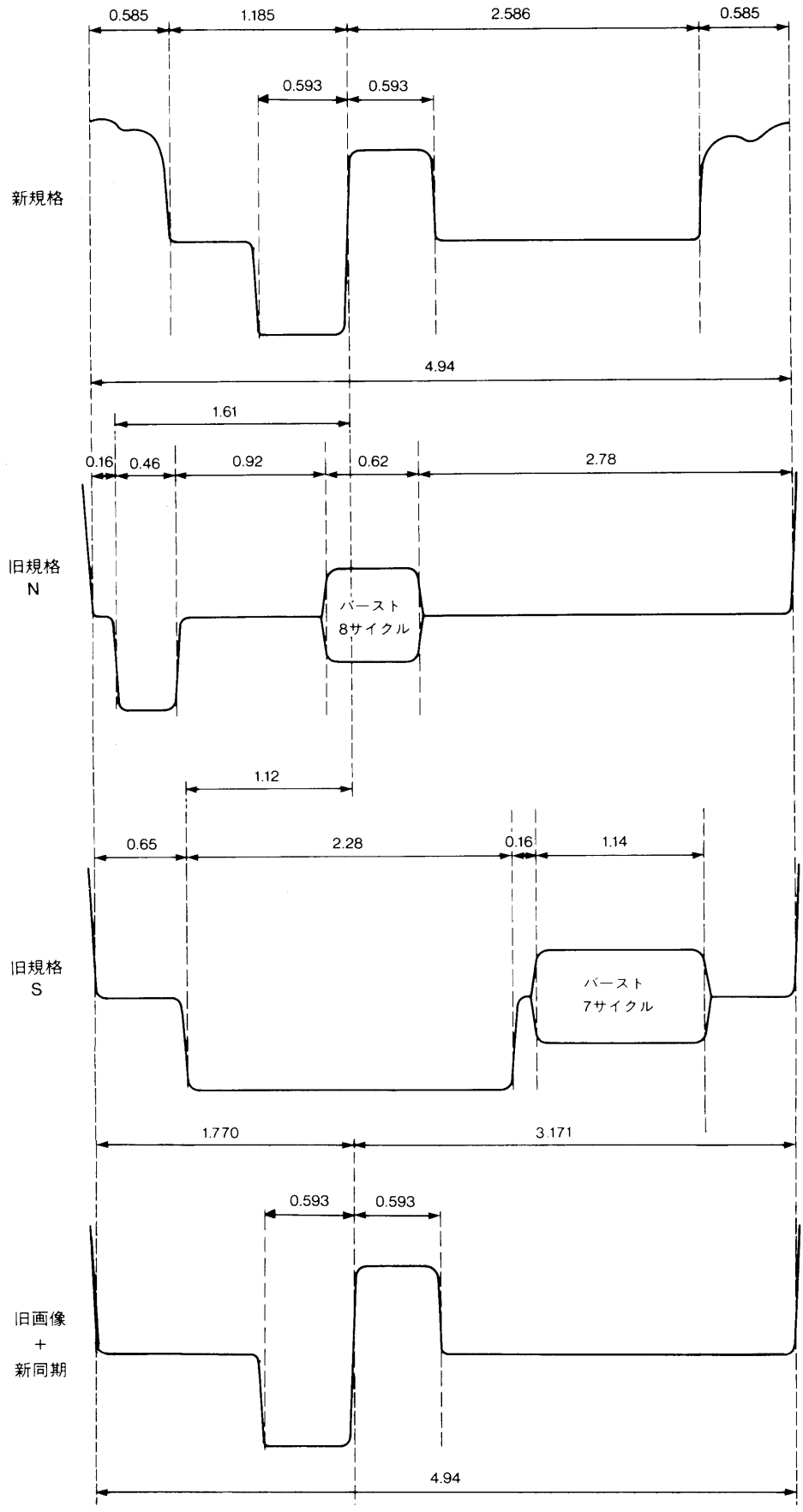

図 4-2. 新規格信号と旧規格信号の水平同期位相関係［単位: μsec］

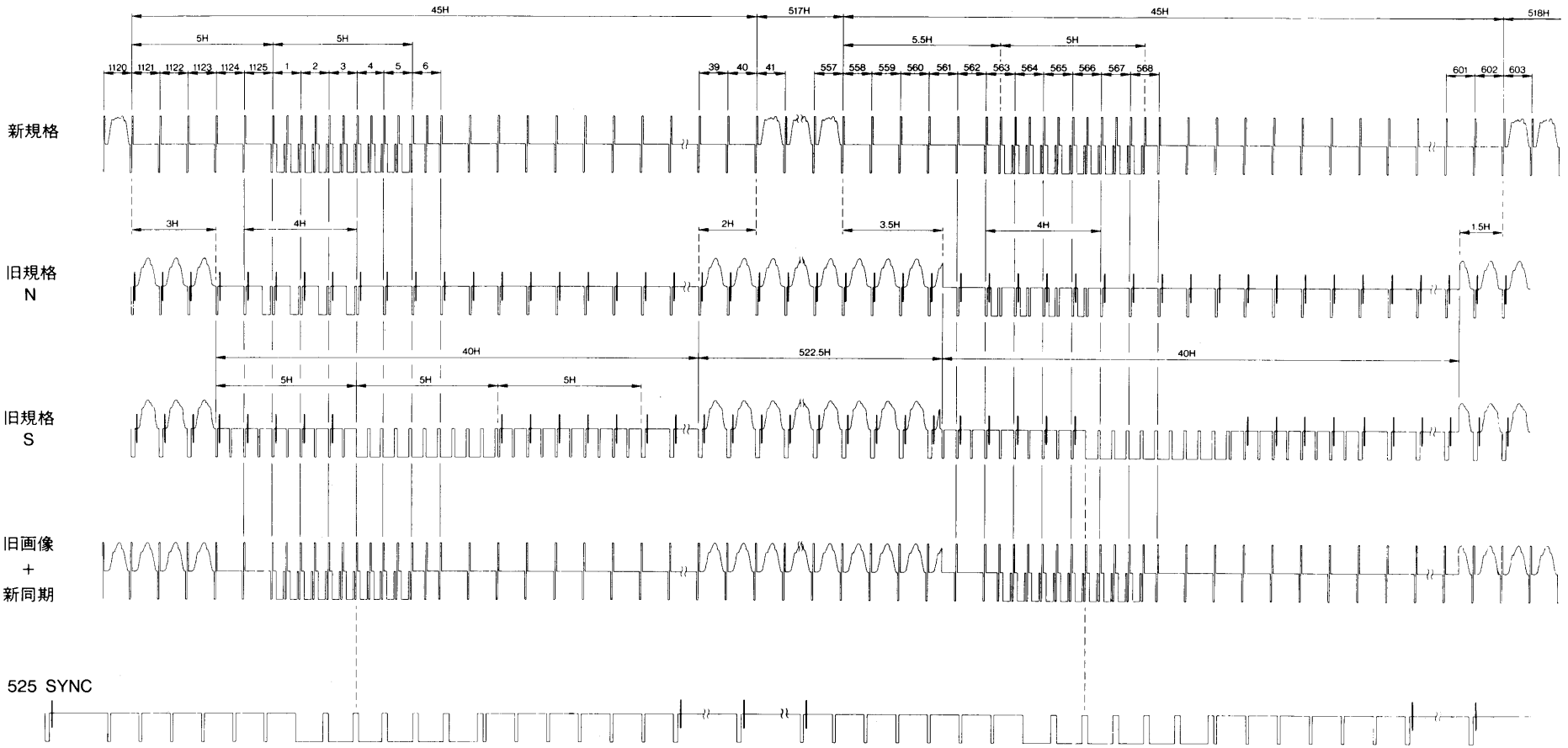

図4-3. 新規格信号と旧規格信号の垂直同期位相関係

4－2．シンクジェネレーター

CH-1，CH-2とも同一回路部分についてはCH-1の回路についてのみ説明します。

4－2－1．入力セレクト回路

入力セレクト回路は，入力同期信号としてVIDEO G／Y信号を用いるか，REF SYNC信号を用いるかの選択を行います。

スイッチS1によってリレーRY101を開閉し，入力同期信号を選択します。REF SYNC信号は，入力バッファーQ101，102を経てリレーRY101に入力されます。VIDEO SYNC信号はビデオ入力回路のバッファーを経てリレーRY101に入力されます。

Q111はCH-1のREF SYNC信号をCH-2に供給するためのバッファーです。CH-2にはスイッチS4によってCH-1のREF SYNC信号とCH-2のREF SYNC信号とを切り換えるためのリレーRY301があります。S4が［NORM］の位置にある時はCH-1とCH-2は独立に動作しますが［1→2］の位置にある時はCH-1のREF SYNC信号がCH-2に供給され，2系統がパラレルに動作します。

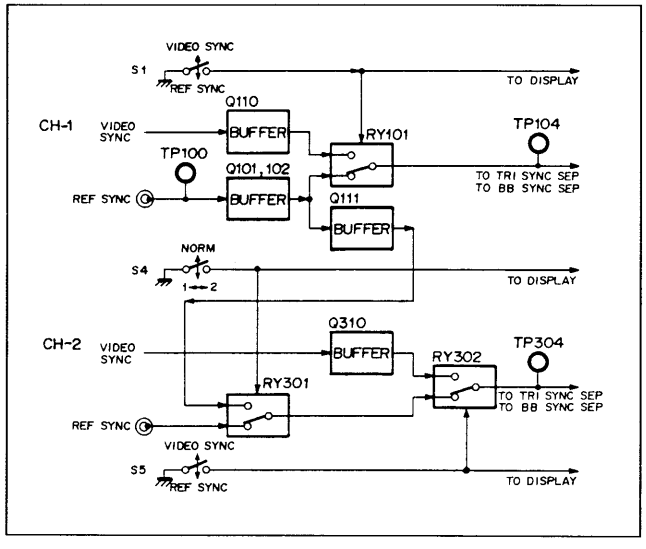

図4-4．入力セレクト回路

4－2－2．旧規格同期分離回路

入力セレクト回路で選択された入力同期信号はICF2で約6倍に増幅されL101，C120，C123で構成されるローパスフィルタによってバーストが抑圧されます。バッファーICF3を経た入力信号のペデスタルレベルはICG3，D105，D106，Q104で0Vにクランプされ，次にICE4でラフな同期分離が行われ，メイン同期分離用のシンクチップサンプルパルスが作られます。ICE4の出力からモノマルチICH9によってクランプパルスが生成され，メインペデスタルクランプ回路とビデオ入力信号のクランプ回路に供給されます。

バッファーICF3の出力はICF4に入力されICH9で作られたクランプパルスによってペデスタルが0Vにクランプされます。さらにサンプルホールド回路ICE5，F5でシンクチップ電位が検出されR152とR163で1／2に分圧されます。ペデスタルレベルが0Vにクランプされた信号と，シンクチップの1／2の電位がICG5で比較され，同期信号がICG5の7ピンに得られます。これによって入力電圧の変動の影響を受けない正確な同期分離が可能となります。

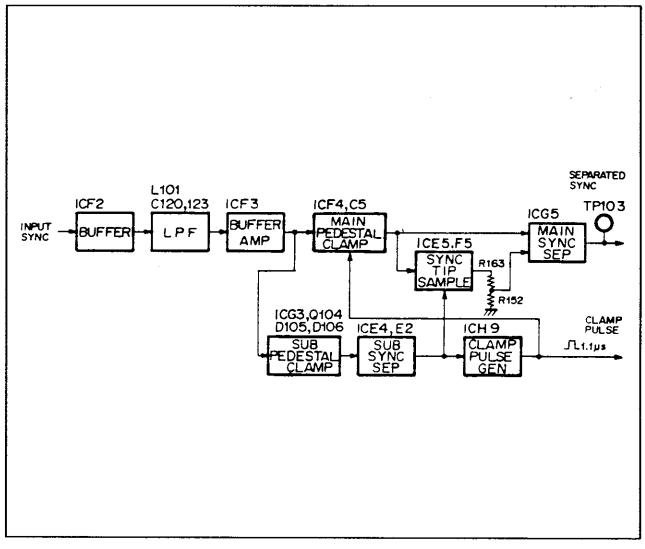

図4-5．旧規格同期分離回路

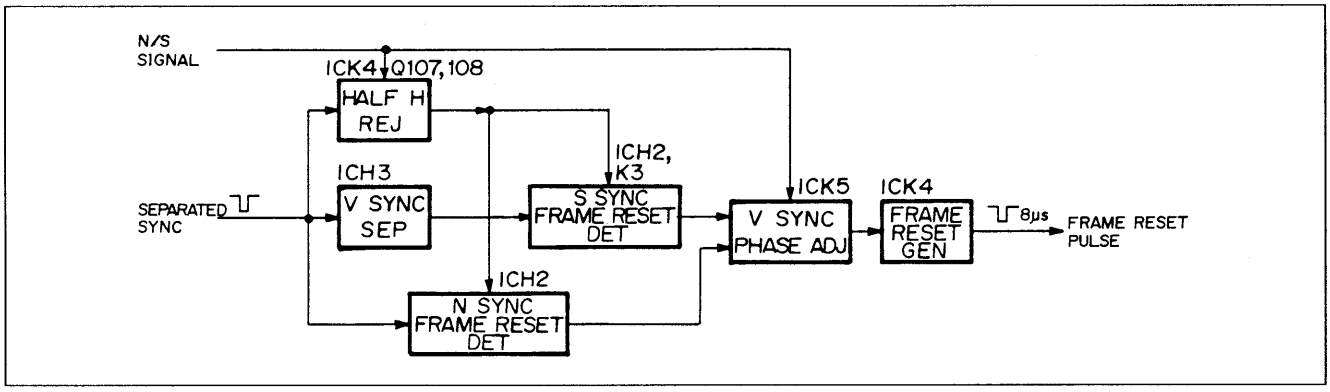

図4-6. 旧規格フレーム分離回路

4−2−3. 旧規格フレーム分離回路

分離された同期信号からICK4, Q107, Q108によってVブランキング期間のHALF Hパルスが除かれて, Hパルスが生成されます。N同期信号とS同期信号とで等化パルスの位置に違いがあるためQ107, 108によりICK4の時定数を切り換えています。

S同期信号の場合はICH3, R145, C139によりV同期信号を分離し, V同期信号の立ち上がりでHパルスをラッチすることによってフレームパルスがICK3の11ピンに得られます。一方, N同期信号の場合はHパルスで直接同期分離信号をラッチすることによってフレームパルスを得ています。分離されたフレームパルスはICK5の6, 7ピンに入力され垂直位相関係が図4-3.になるようにコントロールされます。

ICK5の出力はパルス幅を8 μsに整形され, フレームリセットパルスとなり, Vカウンターをリセットします。

4−2−4. バースト分離回路

バッファーICF6を経た入力同期信号からバンドパスフィルタでバースト信号が分離されます。旧規格N用と旧規格S用の2種類のバンドパスフィルタが使われます。分離されたバースト信号はICC7, A7, D4によりTTLレベルに変換されてからICA6によって中央の1サイクルだけがとり出され, PLLの基準パルス (REF H) として用いられます。バーストパルスの選択はICH5, Q105, Q106よりなる回路で行われます。

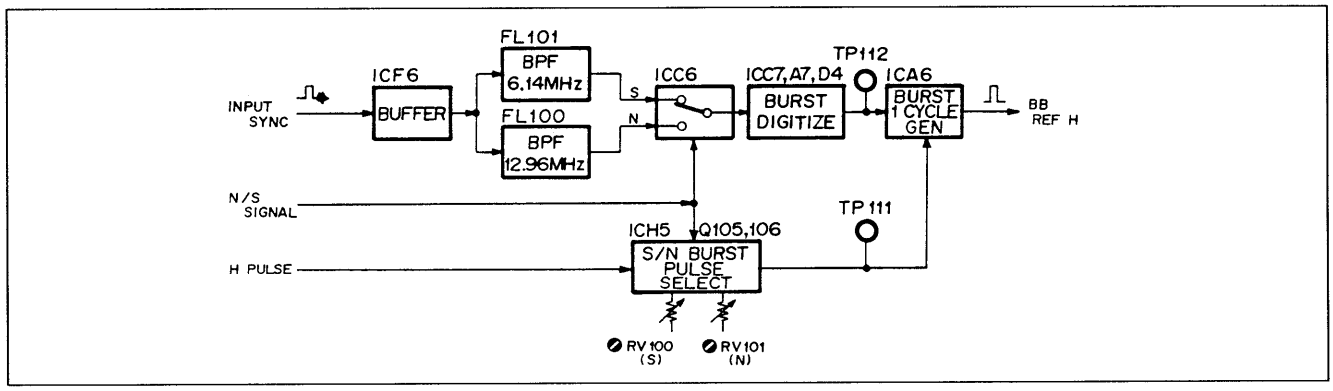

図4-7. バースト分離回路

4－2－5. 新規格同期／フレーム分離回路

入力セレクト回路を通った入力同期信号はバッファーアンプICA2で約6倍に増幅された後，ICA1，D100，D101，Q100でペデスタルを0 Vにクランプされ，次にICA3で3値同期信号の始めの負極性パルスが分離されます。この信号からHALF Hが除かれたHパルスがICA5の6，7ピンに得られ，フレームパルスの分離，メイン同期分離用のイネーブルパルスそしてクランプパルス発生用に用いられます。
バッファーICA2から出力された入力同期信号はICB3によってペデスタル電位が0 Vにクランプされます。次に高速コンパレーターICD3によって3値同期信号の立ち上がり部分が検出され正確な同期分離が行われます。
このコンパレーターにはICA5の10ピンで作られR167，136，135でECLレベルに変換されたイネーブルパルスを入力し3値同期信号の立上がり部分に730 nsのウインドウを設けて動作を正確にしています。

一方ICA3の出力からICH3，R129，C127でV同期信号が分離されます。分離されたV同期信号はICK6の3ピンに入力され前縁でHパルスをラッチします。この結果フレームパルスがICK3の8ピンに得られます。このフレームパルスは垂直位相関係が図4-3.になるようにICH6でコントロールされます。この後，ICK8でパルス幅を8 μsに整形され，フレームリセットパルスとなり，Vカウンターをリセットします。

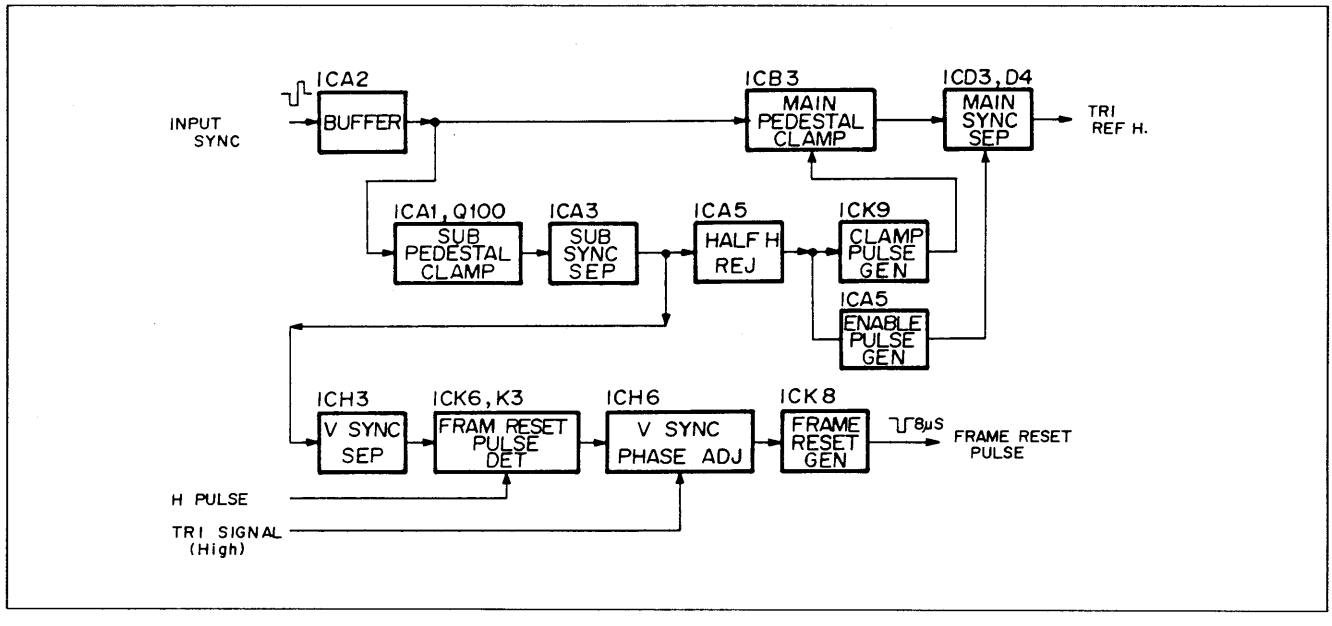

図4-8. 新規格同期／フレーム分離回路

4－2－6. 位相比較器およびVCO

分離された3値／N／S同期信号のいずれか一つがICA4で選択され，REF H信号になります。ICA4はその他にフレームリセットパルス及び入力クランプパルスの新／旧信号切り換えスイッチとしても用いられます。REF H信号は位相比較器ICC8の6ピンに入力され，位相比較器のもう一方の入力7ピンにはROMから読み出され位相調整回路を経たカウントHが入力されます。また入力同期信号がS同期信号の時はV同期パルス期間にバースト信号がないため，この期間は位相比較器を停止させるDISABLEパルスをICH13の1ピンに与えています。外部からの入力信号が有り，EXTロックモードと判断された時はアナログスイッチICA8がONとなり，位相比較器出力はVCOのコントロール電圧として用いられます。外部信号が入力されていない時はICB9から2.0 VのDC電圧が与えられ，VCOは固定発振します。

HDSC-1000に実装されている69.12 MHz VCOはフィールド周波数60.00 Hz用ですが，フィールド周波数59.94 Hz用の69.05095 MHz VCOを追加すると，入力信号のフィールド周波数に応じてQ112, 113, 114, 115からなるVCOセレクトスイッチにより自動的にVCOが選択されます。
VCO出力はバッファーICC10を経て，ICC11でTTLレベルに変換され旧規格同期信号出力用のD／A変換器のクロックとして用いられます。またカウンターICE9により1／2，1／4に分周された後，新旧の同期信号発生用ROMの読み出しクロックとして使用されます。

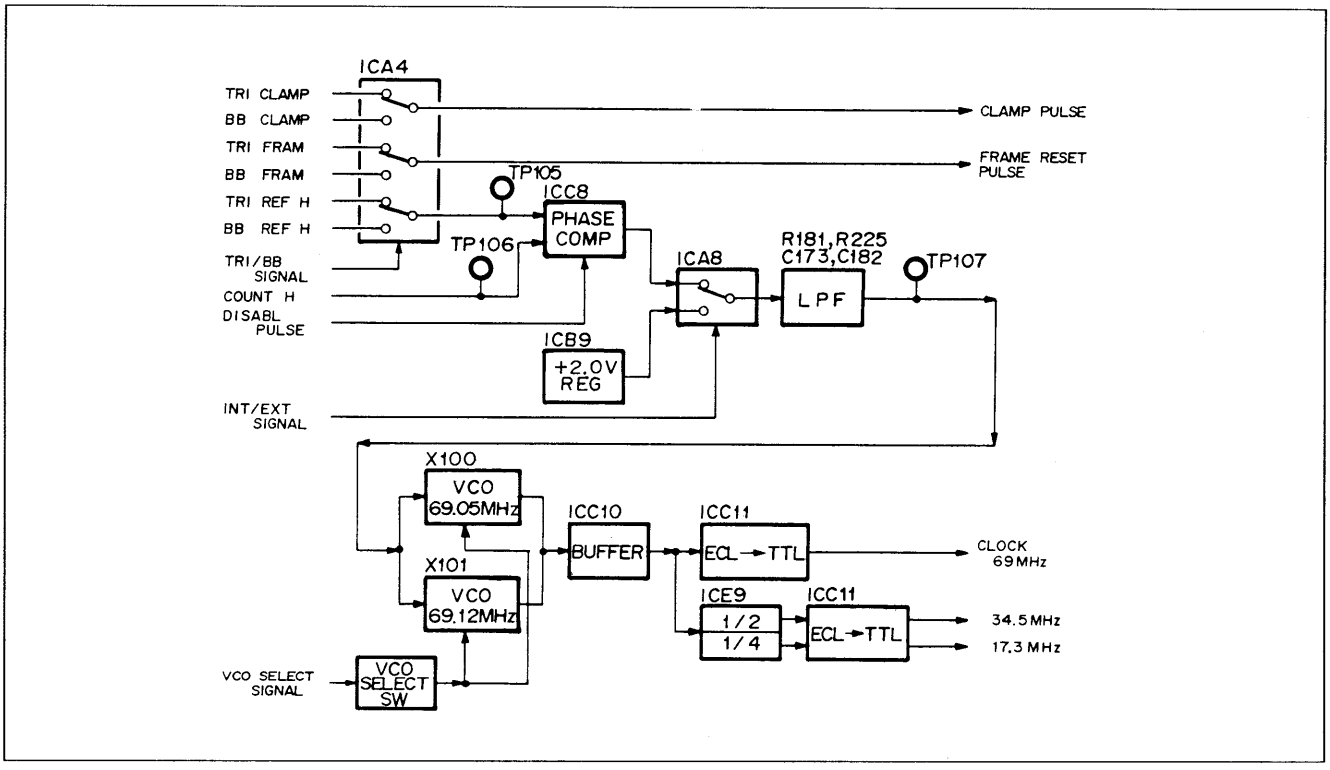

図4-9. 位相比較器及びVCO

4－2－7. 入力同期信号判別回路

この回路は入力信号の有無（INT／EXT）の判別，同期信号の種類（3値／N／S）判別，及びフィールド周波数（60 Hz／59.94 Hz）の判別を行います。各回路は判別結果に従って自動的に入力信号にロックします。

(1) INT／EXT検出

リトリガーモノマルチICH10がHパルスによってトリガーされ，Q出力がローレベルであれば無入力と判断しINTモードになり，VCO　X100，101は固定発振します。この時，ICK11が発振しLEDディスプレイのTRI／BBが点滅します。

(2) 同期信号の種類の判別

まずV同期パルスの長さの違いを利用してS同期信号（5 H）及び3値同期信号（5 H）とN同期信号（4 H）の区別を行い，一方でH同期パルスのパルス幅の違いからS同期信号と3値同期信号との分離を行い両者のゲートをとって3種類の区別を行っています。リトリガーモノマルチICH10の9ピンの50 μs（1.7 H）パルス出力でV同期パルスをラッチしてV同期の長短を検出し，入力信号が旧規格S或は新規格の時はICF12の9ピンがハイレベルとなります。一方ICH7において新規格用のイネーブルパルスでV同期信号をラッチすることによって旧規格Sの時のみハイレベルとなる信号がICH7の5ピンに得られます。またICH7の6ピンとICF12の9ピンとのANDゲートをとると新規格の時のみローレベルとなる信号が得られます。

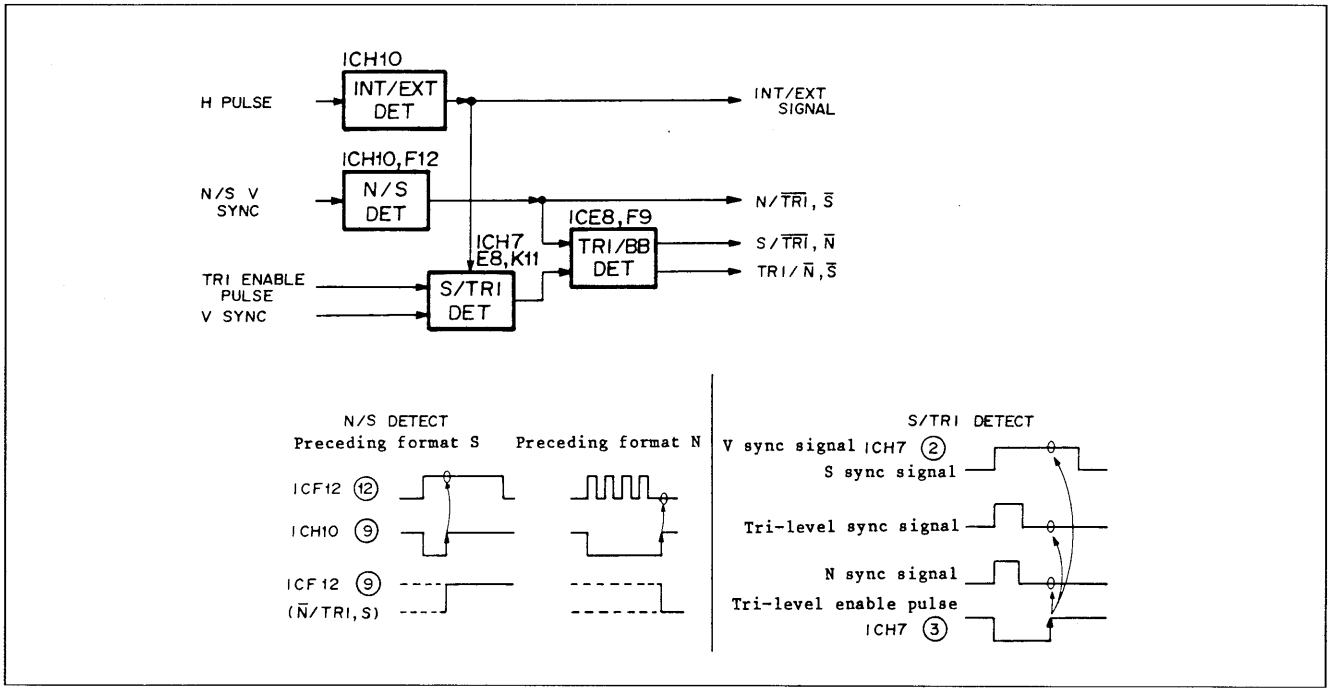

図4-10. INT／EXT検出，同期信号の種類の判別回路

(3) フィールド周波数判別回路

60 Hz或いは59.94 Hz用のVCOが入力同期信号にロックしているかどうかでフィールド周波数の判別を行っています。VCOがロックしている時は，位相比較器ICC8に入力されるREF HとカウントHは図4-11.に示す位相関係にあり，ICH7を用いてカウントHをREF Hでラッチすると ICH7の8ピンはローレベルとなりGREENのLED D108が点灯します。反対にVCOがロックしていないと，ICH7の8ピンはハイレベルになるかあるいは周期的にハイレベルとローレベルとを繰り返します。

ICH7の出力を積分し，ゲートICH3，E10を経た信号はハイレベルとなり，タイマーICK11がアクティブとなり発振を開始します。

ICK11出力はフリップフロップICH12で4分周され，約2秒間隔でQ112，113，114，115からなるVCOセレクトスイッチによりVCO　X100，101の電源を切り換えます。

ICH12出力は表示回路に出力され，たとえば59.94 Hz入力時に59.94 Hz用のVCOが実装されていない時はアンロック状態となりLEDディスプレイの"OFF LINE"が点滅します。なお，INTモードの場合はINT FVスイッチS8によりICH12をセットし，60 Hz或いは59.94 Hzを選択します。

4－2－8.　Vタイミング信号発生回路

VCOの出力を1024分周した2 fHのクロックでVカウンタICA15，E13を働かせ，8 KバイトのEPROM ICD16でVタイミング信号を生成しています。前半の4 KバイトはN同期信号用，後半4 KバイトはS同期信号用としROMの最上位ビットを切り換えています。3値同期信号については専用のビットを使用しています。

入力同期信号から分離されたフレームリセットパルスとROM ICD16の11ピンのフレームリセットパルスとのANDをICF9で取りカウンタのリセットを行い，フレーム同期をとっています。

ROMの出力はV同期信号としてブラックバースト（旧規格N，S）用に2ビットずつ，3値同期信号用に2ビット，S同期信号用の位相比較イネーブルパルスと入力ビデオのブランキング用に1ビット，その他にCH-2には525 SYNCのフレームリセットパルス用1ビットがあります。これらの出力はICD14で2 fHクロックに同期化して出力されます。

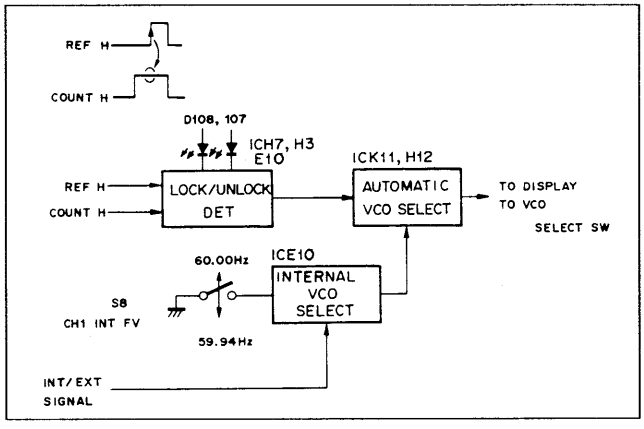

図4-11. フィールド周波数判別回路

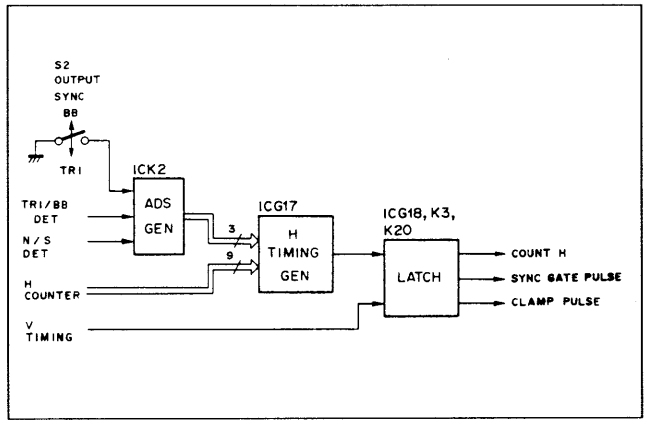

図4-12. Vタイミング信号発生回路

4－2－9. 同期信号発生回路

カウンタICF13, F14の出力と, ICK13で同期化されたVタイミング信号をPROMのアドレスに入力して同期信号を発生させています。ICG16が3値同期信号のPROMです。ICK16, K18, D18, A17がN／S同期信号用のPROMで, ブラックバーストを発生します。N／Sブラックバースト用PROMはアクセスタイムの制約から図4-13.のように4相駆動されます。PROM出力はデータセレクタICA20, D21で69.12 MHzのサンプルデータとなり高速D／Aコンバータ ICA21に入力されます。

D／Aコンバータ出力はローパスフィルタFL102を通り高調波を除かれN／Sブラックバースト信号となります。3値同期信号は2ビット情報としてPROM ICG16に入っています。ICG16出力は高速CMOSフリップフロップICG18でラッチされ, 抵抗マトリックスで直接D／A変換されて3値同期信号になります。フィルターFL103は3値同期信号の立ち上がり時間を調整します。正負両極性のレベルが等しくなるようにR246でマトリックス抵抗網に若干の修正を加えています。

4－2－10. Hタイミング信号発生回路

Hタイミング信号はPROM ICG17から読み出されます。このPROMのアドレスにはVタイミング出力のかわりに入出力同期信号の組合せを示す3ビットのアドレスが入力されます。この3ビットのアドレスはPROM ICK2で発生されます。出力のカウントHパルスは17.3 MHzクロック単位で入出力同期位相の調整を行います。

シンクゲートパルスはビデオ信号のSYNC信号切り換えを行うパルスであり, Vタイミング信号とのゲートが取られビデオ出力回路のスイッチ信号として用いられます。他に出力同期信号のクランプパルスがHとVのコンポジットとして作られます。

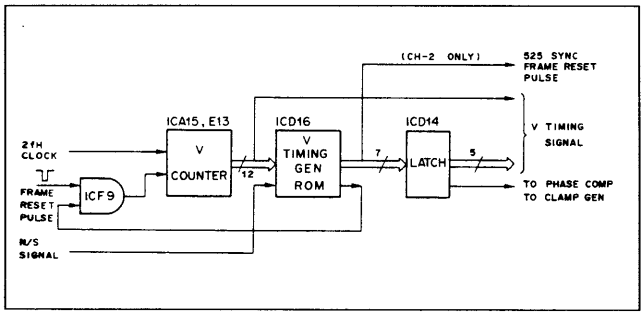

図4-15. Hタイミング発生回路

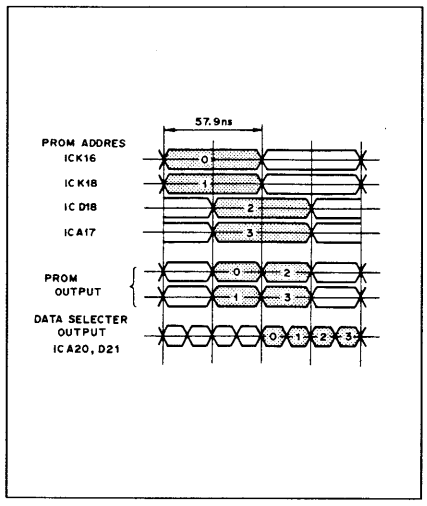

図4-13. N／S BB用PROMの4相駆動

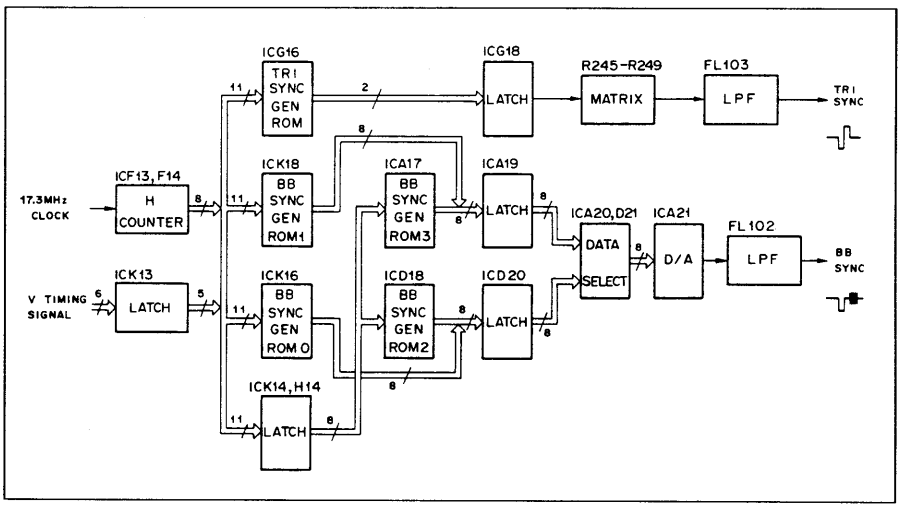

図4-14. 同期信号発生回路

4－2－11. 同期位相調整回路

同期信号出力の位相はHタイミングROMで17.3 MHzクロック単位で調整されますがここでアナログ的に微調整されます。入出力同期信号の組合せを示すアドレスがアナログマルチプレクサICF10に入力され，R219等の調整抵抗に応じたDC電圧が出力されます。このDC電圧はECLモノマルチICF8の7ピンに入力され，出力パルスのパルス幅をコントロールします。一方，ROMからのカウントHパルスでモノマルチICF8をトリガーし，幅が約0.9 μsのパルスを得ています。
このパルス幅をDCコントロールすることにより出力同期位相が正確に調整されます。
RV110は入出力が3値同期信号の時に，RV111はS同期信号の時にそれぞれ入／出力間の位相差が零になるように調整します。その他の組合せの場合は固定抵抗（オープンも含む）で調整しています。パルス幅をコントロールされた出力はICD4でTTLレベルに変換されて位相比較器に入力されてPLLループを作っています。

4－3. ビデオ信号回路

CH-1，CH-2とも同一回路部分についてはCH-1の回路についてのみ説明します。

4－3－1. SYNC出力アンプ

PROMで作られたN／Sと3値の同期信号はスイッチングアンプICK26，Q600，FL600そしてパルスゲートアンプICK27からなるスイッチングおよびペデスタルクランプ回路に入力されます。ここではOUTPUT SYNCスイッチS2による出力の選択とペデスタルクランプが同時に行われます。クランプパルスはHとVのタイミング信号用PROMから作られます。
クランプされた同期信号はリレーRY100を経てG／Y，B／P_B，R／P_Rのビデオ出力アンプに入力され，一方ICK29，Q601，ICK31からなる出力バッファーアンプからREF SYNC信号として出力されます。

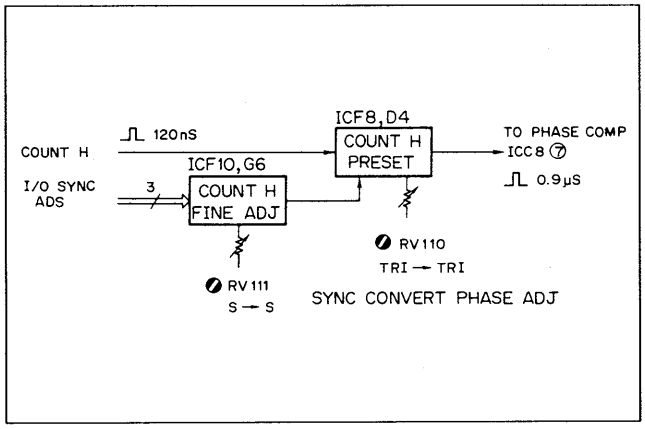

図4-16. 同期位相調整回路

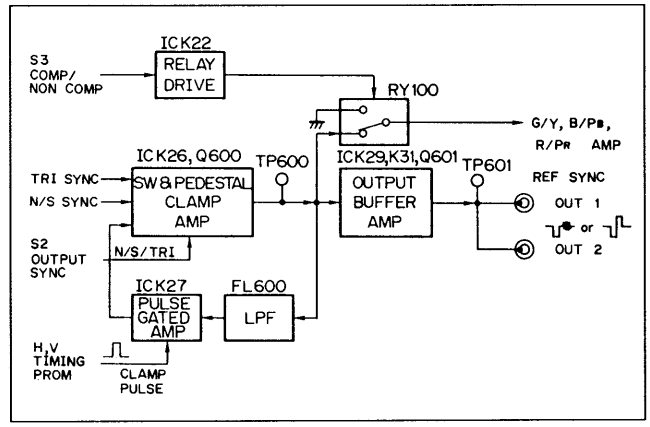

図7-17. SYNC出力アンプ

4－3－2. ビデオ入出力アンプ

G／Yのみ説明します。
入力ビデオはL500 (0.14 μH) で入力リターンロスの補正を受けCH-1では直接，CH-2ではリレーRY700を介してFETバッファーに入力されます。CH-2のリレーは“INPUT 1→2”モードの時CH-1のビデオ信号をCH-2の出力アンプに供給するためのものです。その後ICB27，Q502，FL500そしてパルスゲートアンプICD27からなる回路でペデスタルクランプが行われます。ここでのクランプパルスは入力同期信号から生成されています。FL500は入力信号のバーストレベルを十分に減衰させるためのローパスフィルターでカットオフ周波数は2 MHzです。
クランプされたビデオ信号はICA29，Q503，ICC31からなる出力スイッチャーアンプに供給され，同期信号が置き換えられて出力されます。
CH-1においてトランジスタQ504はVIDEO SYNCを取り出すためのバッファーであり，Q505は“INPUT 1-2”モード時のビデオ出力バッファーです。

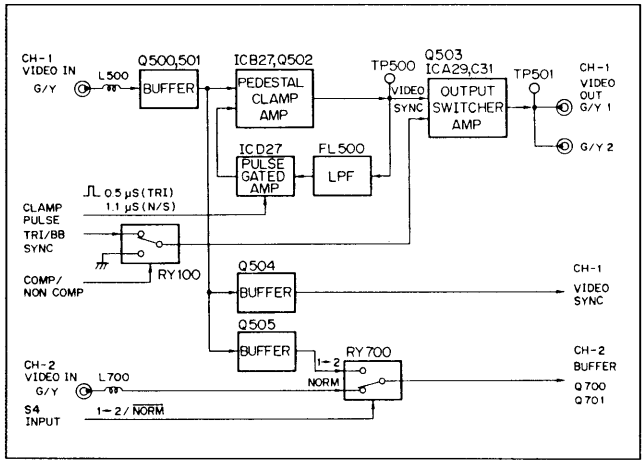

図4-18. ビデオ入出力アンプ

4－3－3. 525 SYNC出力回路（CH-2のみ）

Vカウンターからの Hパルスをカウンター ICG23で1／15にカウントダウンした信号と，525 SYNC GEN ICG20の出力をICE24で1／7にカウントダウンした信号とをICA23に入力して位相比較を行い，走査線1125本にロックした525 SYNC信号を得ています。
ここでもフィールド周波数60／59.94 Hzの違いよりVCO X1，X2を切換える必要があり，Q1，2，3，4でVCOの電源を切換え，またICE23で選択しています。
525系のシンクとバーストはオープンコレクタのICG22を用いて抵抗で加算され，バッファーアンプICJ20及びL1，L2，L3，C11，C15からなるカットオフ周波数4 MHzのローパスフィルターそして出力バッファーICJ23を経て出力されます。
Vタイミング信号発生用のPROM ICQ15から出力されるフレームリセット信号によって1125系に対する525系の位相が決められます。

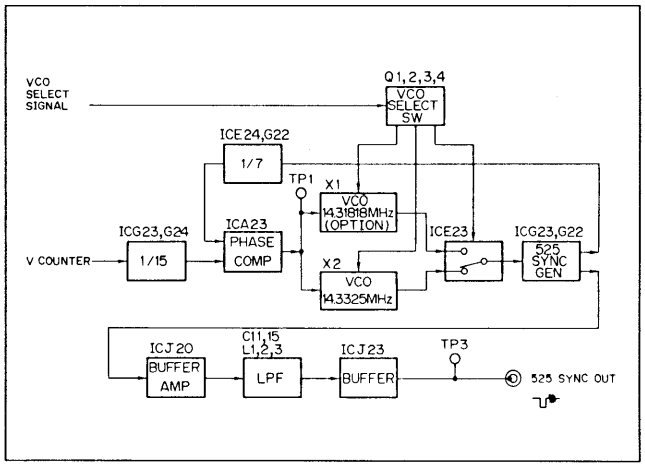

図4-19. 525 SYNC出力回路

第5章
調整のための一般情報

5－1. 調整部品索引

SG-138 Board	参照項
CV500, CV700	8-6
CV510, CV710	8-6
CV520, CV720	8-6
RV100, RV300	8-2
RV101, RV301	8-2
RV110, RV310	8-4
RV111, RV311	8-4
RV120, RV320	8-1
RV200, RV400	8-3
RV210, RV410	8-3
RV501, RV701	8-5
RV502, RV702	8-5
RV511, RV711	8-5
RV512, RV712	8-5
RV521, RV721	8-5
RV522, RV722	8-5
RV600, RV800	8-5
PW-91A Board	
RV71	7-1-3
RV72	7-1-2
RV91	7-1-3
RV92	7-1-2
RV111	7-1-3
RV131	7-1-3
RV132	7-1-2
RV151	7-1-2
CT-29 Board	
RV201	7-2
RV202	7-1-1

5－2. 調整順序

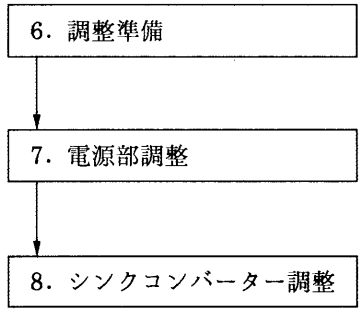

5－3. プリント基板交換後の調整

プリント基板交換後の調整は特に必要ありません。

第6章
調整前の準備

6－1. 使用機器

(1) オシロスコープ及びプローブアダプター
オシロスコープ
帯域; 200 MHz
ソニーテクトロニクスタイプ475又は相当品
プローブアダプター
接地用プローブチップ
ソニーテクトロニクス部品番号013-0085-00

(2) デジタル直流電圧計
有効桁数: 4 ½桁以上
精度: 0.02%±1カウント以下

(3) 直流電流計
10アンペアレンジ
第7章電源部調整に使用します。

(4) スペクトラムアナライザー（注1）
YHP社 タイプ141T (8552B, 8553Bと組合せ) 又は相当品

(5) トラッキングジェネレーター（注1）
HP社 タイプ8444A又は相当品

(6) 25 MHz正弦波発振器（注1）

(注1) 8-6項でスペクトラムアナライザー及びトラッキングジェネレーターを使用できない場合、25 MHz正弦波発振器又は高域成分を含むHDVS映像信号を使用します。

6－2. スイッチの設定

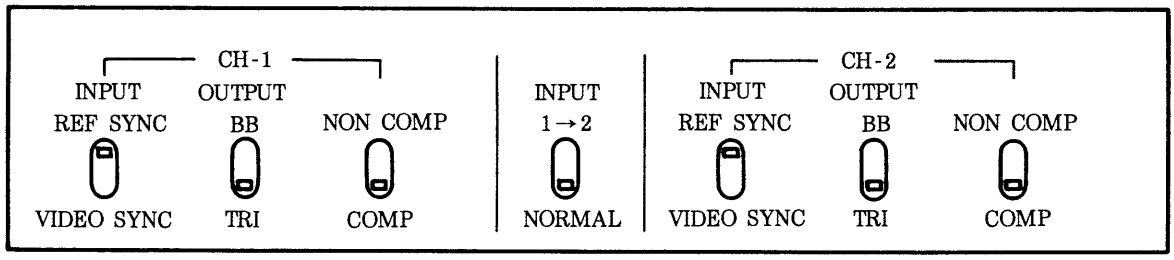

INPUTスイッチ (CH-1, CH-2共); REF SYNC
OUTPUTスイッチ (CH-1, CH-2共); TRI
NON COMP／COMPスイッチ (CH-1, CH-2共); COMP
INPUT 1→2／NORMALスイッチ; NORMAL

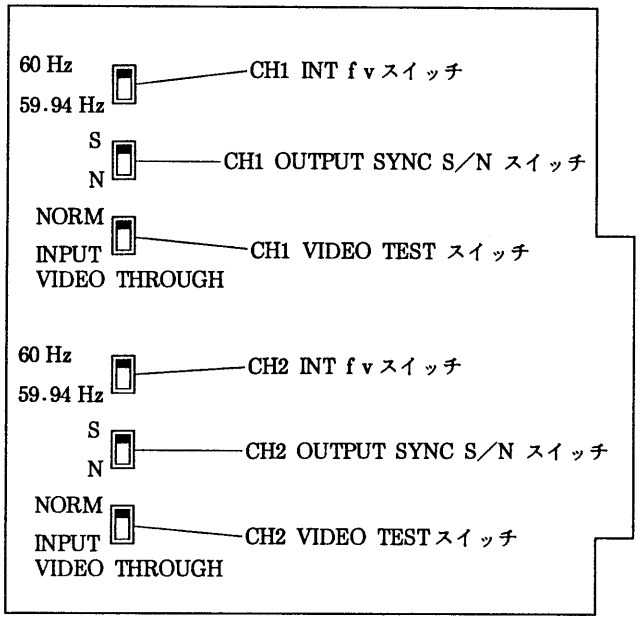

INT f v スイッチ (CH-1, CH-2共); 60 Hz
OUTPUT SYNC スイッチ (CH-1, CH-2共); S
VIDEO TESTスイッチ (CH-1, CH-2共); NORM

第7章
電源部調整

注意
調整を要することがはっきりわかっている場合以外は電源電圧の再調整は避けることをおすすめします。
規定された電源の出力電圧を変えると多くの回路の特性に影響を及ぼし，性能が落ちたり，全部の調整が必要となります。

7－1．　無負荷時電源部調整

注意
各電源の調整を行なう前に下記の各基板の接続を外してください。
1)　SG-138 Board（基板を本体から外します。）
2)　DP-88 Board（MB-201 基板の CN2 コネクターを外します。）

7－1－1．　無負荷時スイッチングパルス DUTY 調整

測定器；デジタル直流電圧計

調整
CT-29 Board
IC202 pin 1＝＋5.00±0.05 Vdc
◐RV202

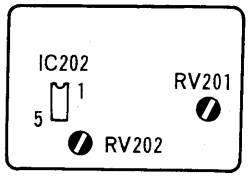

CT-29 Board
－solder side－

7－1－2．　無負荷時電圧調整

測定器；デジタル直流電圧計

注意
直流電圧計のプローブを MB-201 基板の CN4 又は CN5 のコネクターの端子ピンに差し込み，アースは GND タブを使用します。

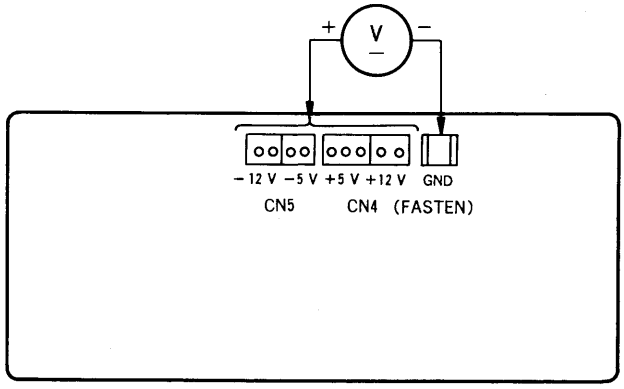

MB-201 Board －solder side －

Step 1.　＋12 V 調整
　MB-201 Board:　CN4 ピン 1 又は 2＝＋12.0±0.1 Vdc
　PW-91A Board:　◐RV92
Step 2.　＋5 V 調整
　MB-201 Board:　CN4 ピン 3，4 又は 5＝＋5.00±0.05 Vdc
　PW-91A Board:　◐RV72
Step 3.　－5 V 調整
　MB-201 Board:　CN5 ピン 1 又は 2＝－5.00±0.05 Vdc
　PW-91A Board:　◐RV151
Step 4.　－12 V 調整
　MB-201 Board:　CN5 ピン 3 又は 4＝－12.0±0.1 Vdc
　PW-91A Board:　◐RV132

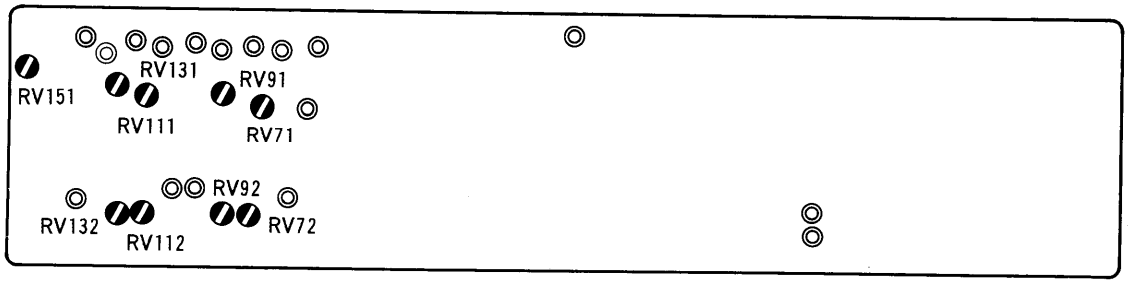

PW-91A Board －component side－

7－1－3. 無負荷時ショート電流調整

測定器；直流電流計

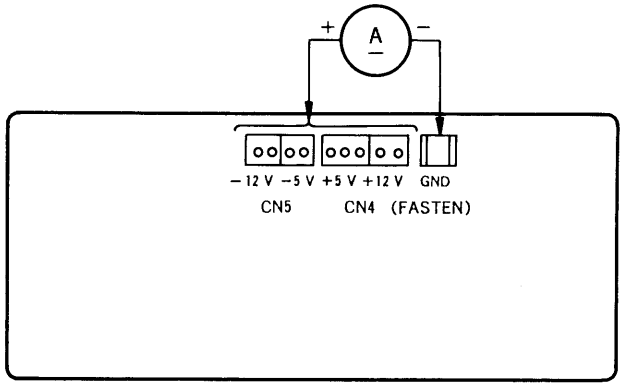

MB-201 Board －solder side－

Step 1. ＋12 V 調整
MB-201 Board: CN4 ピン 1 又は 2＝1.20±0.1 A
PW-91A Board: ◐RV91

Step 2. ＋5 V 調整
MB-201 Board: CN4 ピン 3, 4 又は 5＝2.0±0.2 A
PW-91A Board: ◐RV71

Step 3. －5 V 調整
MB-201 Board: CN5 ピン 1 又は 2＝0.80±0.08 A
PW-91A Board: ◐RV111

Step 4. －12 V 調整
MB-201 Board: CN5 ピン 3 又は 4＝0.60±0.06 A
PW-91A Board: ◐RV131

注意
上記無負荷時電源部調整を終えた後，各基板を再び接続しておいてください。

7－2. 負荷時レギュレーター出力電圧調整

測定器；デジタル直流電圧計

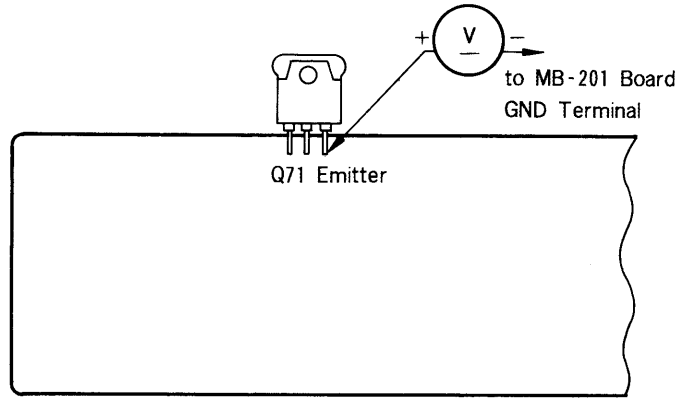

PW-91A Board －component side－

調整
PW-91A Board: Q71 エミッター＝＋6.00±0.05 Vdc
CT-29 Board: ◐RV201

第8章
シンクコンバーター調整

SG-138基板（部品面）

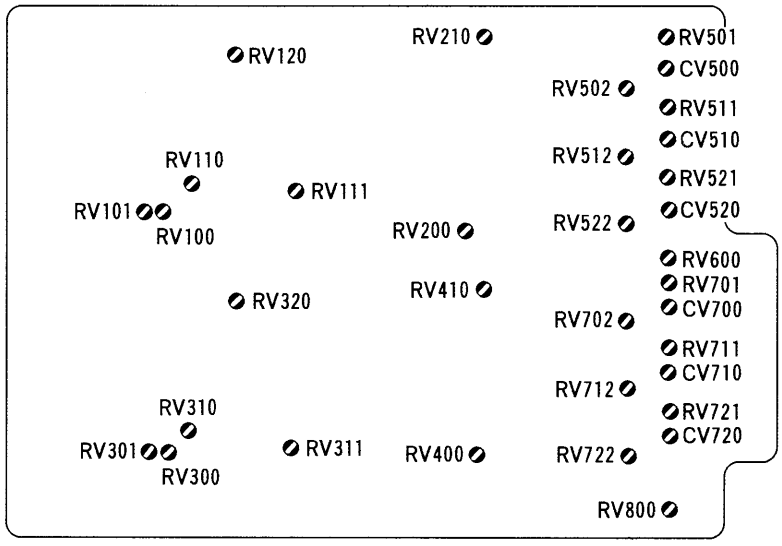

（注） 特に指定のない限りCH-1側を調整する場合を表わします。（ ）内はCH-2側を調整する場合です。

8－1. 内部発振周波数調整

スイッチの設定: 6-2項参照
測定器: デジタルボルトメーター

CH-1: TP107／SG-138: +2.00±0.05 V ●RV120／SG-138
CH-2: TP307／SG-138: +2.00±0.05 V ●RV320／SG-138

8−2. バースト位相調整

スイッチの設定: 6-2項及び本文参照
測定器: オシロスコープ

1. 機器の接続
CH-1 (CH-2) のVIDEO IN SYNCにCH-2 (CH-1) VIDEO OUT 1 SYNCを接続します。つまり
CH-1を調整する場合は実線のように接続し，CH-2を調整する場合は点線のように接続してください。

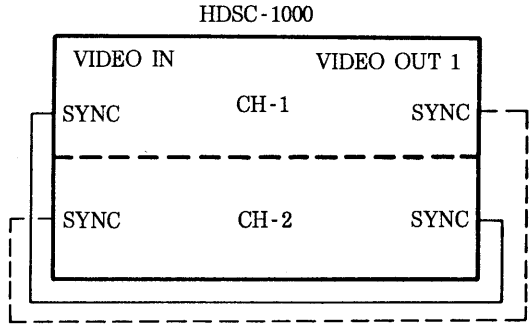

2. 操作パネルのCH-2 (CH-1) OUTPUTスイッチをBBにします。

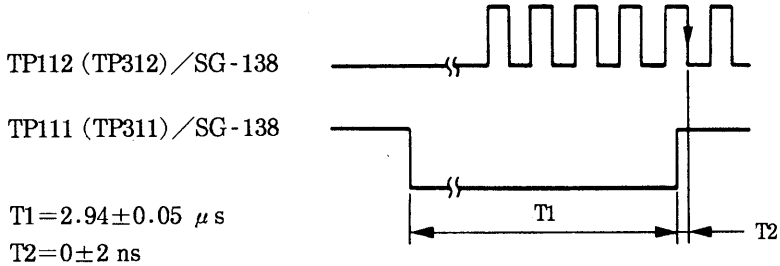

T1=2.94±0.05 μs
T2=0±2 ns
◐RV100 (◐RV300)／SG-138

3. SG-138基板のCH-1 (CH-2) OUTPUT SYNC S／Nスイッチを Nにします。

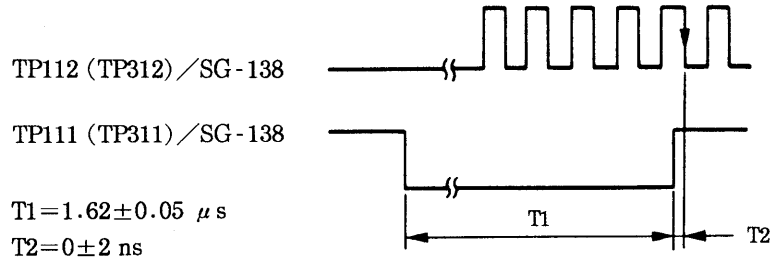

T1=1.62±0.05 μs
T2=0±2 ns
◐RV101 (◐RV301)／SG-138

4. 操作パネルのCH-2 (CH-1) OUTPUTスイッチをTRIに，SG-138基板のCH-1 (CH-2) OUTPUT SYNC S／Nスイッチを Sに戻します。

8－3. SYNC出力レベル調整

スイッチの設定: 6-2項及び本文参照
測定器: オシロスコープ

1. 機器の接続
CH-1 (CH-2) のVIDEO IN SYNCにCH-2 (CH-1) VIDEO OUT 1 SYNCを接続し，CH-1 (CH-2) VIDEO OUT 1 SYNCをオシロスコープに接続します。つまりCH-1を調整する場合は実線のように接続し，CH-2を調整する場合は点線のように接続してください。

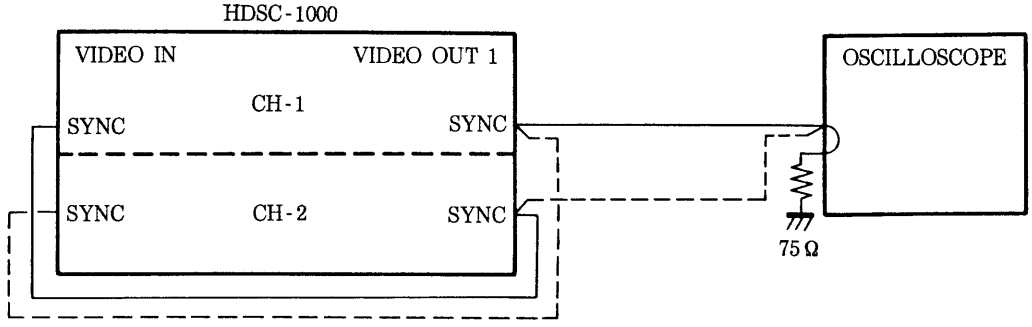

2. 操作パネルのCH-1 (CH-2) OUTPUTスイッチをBBにします。
CH-1 (CH-2) VIDEO OUT 1 SYNC

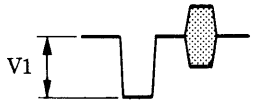

V1＝300±4 mV
⊘RV210 (⊘RV410)／SG-138

3. 操作パネルのCH-1 (CH-2) OUTPUTスイッチをTRIにします。
CH-1 (CH-2) VIDEO OUT 1 SYNC

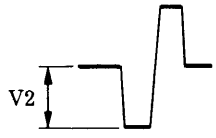

V2＝300±4 mV
⊘RV200 (⊘RV400)／SG-138

8－4. SYNC出力位相調整

スイッチの設定: 6-2項及び本文参照
測定器: オシロスコープ

1. 機器の接続
CH-1 (CH-2) VIDEO IN SYNCにCH-2 (CH-1) VIDEO OUT 1 SYNCを接続し，CH-1 (CH-2) VIDEO OUT 1 SYNC及びCH-2 (CH-1) VIDEO OUT 2 SYNCをオシロスコープに接続します。
つまりCH-1を調整する場合は実線のように接続し，CH-2を調整する場合は点線のように接続してください。
接続ケーブルは遅延時間を合わせるため図のように長さを合わせてください。

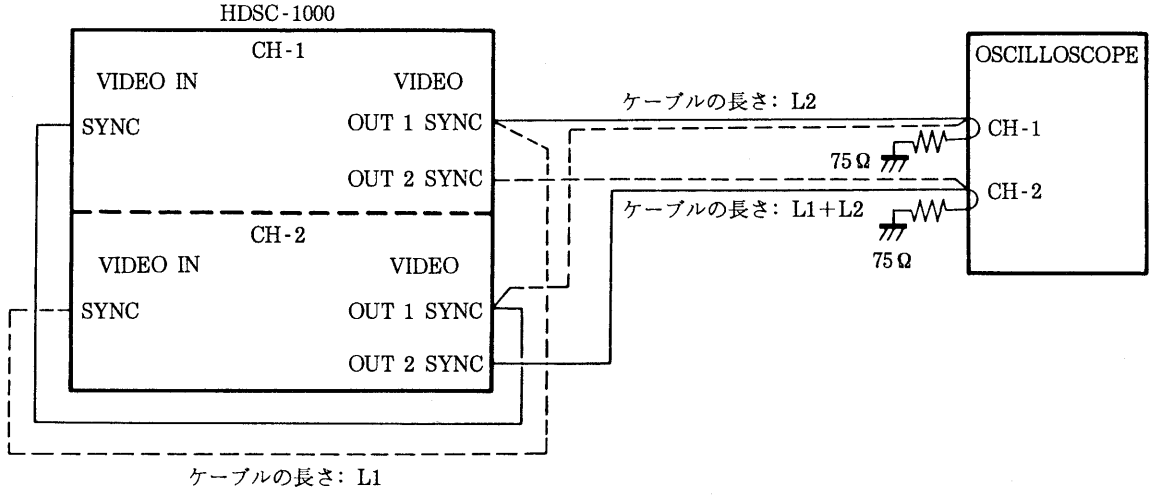

2. 操作パネルのCH-1及びCH-2 OUTPUTスイッチがTRIであることを確認します。

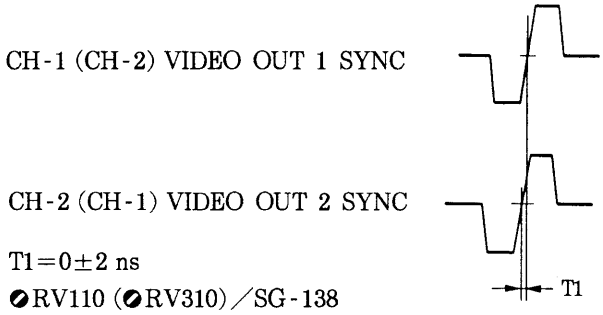

T1＝0±2 ns
◐RV110 (◐RV310)／SG-138

3. 操作パネルのCH-1及びCH-2 OUTPUTスイッチをBBにします。

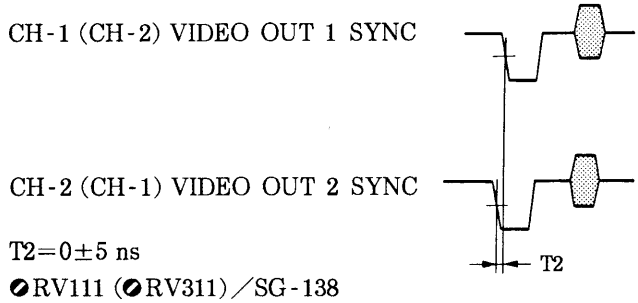

T2＝0±5 ns
◐RV111 (◐RV311)／SG-138

4. 操作パネルのCH-1及びCH-2 OUTPUTスイッチをTRIに戻します。

8−5. ビデオアウトレベル調整

スイッチの設定: 6-2項及び本文参照
測定器: オシロスコープ

1. G／Yペデスタル電位調整

1−1. 機器の接続

CH-1 (CH-2) VIDEO IN G／YにCH-2 (CH-1) VIDEO OUT 1 SYNCを接続し，CH-1 (CH-2) VIDEO IN SYNCにCH-2 (CH-1) VIDEO OUT 2 SYNCを接続します。つまりCH-1を調整する場合は実線のように接続し，CH-2を調整する場合は点線のように接続してください。

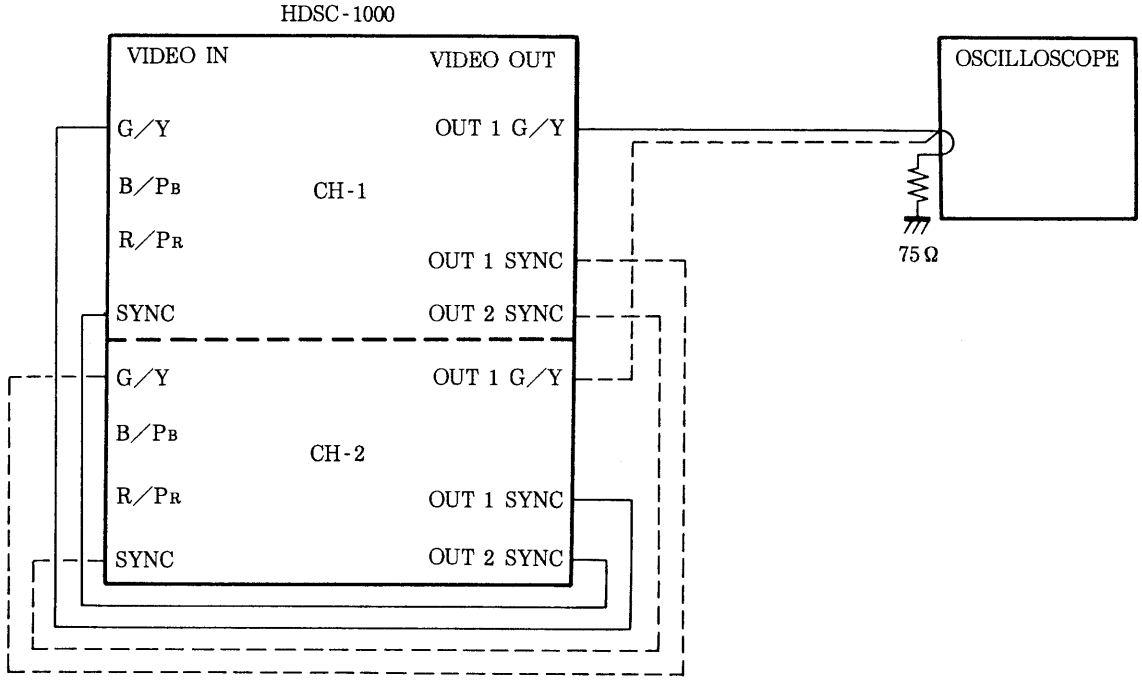

1−2. 調整

CH-1 (CH-2) VIDEO OUT 1 G／YのSYNCペデスタル電位が操作パネルのNON COMP／COMPスイッチをNON COMPにした時と同一電位になるように◐RV600 (◐RV800)／SG-138で調整し，次にVIDEOのペデスタル電位を◐RV502 (◐RV702) で調整します。

CH-1 (CH-2) VIDEO OUT 1 G／Y

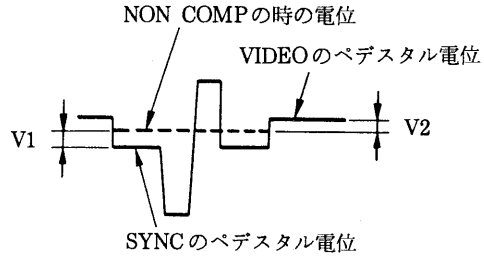

V1＝0±2 mV
◐RV600 (◐RV800)／SG-138
V2＝0±2 mV
◐RV502 (◐RV702)／SG-138

2. G／Y出力レベル調整

2−1. 機器の接続

CH-1 (CH-2) VIDEO IN G／YにVIDEO信号（カメラ等）を入力します。

2−2. 調整

CH-1 (CH-2) VIDEO OUT 1 G／Y

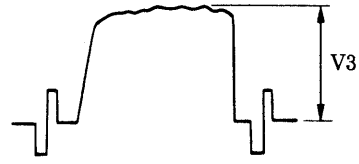

V3＝入力信号±1%
◐RV501 (◐RV701)／SG-138

3. B／P_B, R／P_R, 調整

B／P_B, R／P_Rについてステップ1，2と同様に調整します。ただし，SYNCのペデスタル電位の調整はB／P_B, R／P_Rに対しては不要です。

	VIDEO ペデスタル電位調整	VIDEO 出力レベル調整
B／P_B	◐RV512 (◐RV712)	◐RV511 (◐RV711)
R／P_R	◐RV522 (◐RV722)	◐RV521 (◐RV721)

8－6．ビデオアウトＦ特調整

スイッチの設定：6-2項及び本文参照
測定器：　　スペクトラムアナライザー又はオシロスコープ

1．SG-138基板のCH-1 (CH-2) VIDEO TESTスイッチをINPUT VIDEO THROUGHにします。操作パネルのCH-1 (CH-2) INPUTスイッチをREF SYNCにします。

2．G／Y調整

2－1．機器の接続

CH-1 (CH-2) VIDEO IN SYNCにCH-2 (CH-1) VIDEO OUT 1 SYNCを接続します。トラッキングジェネレーターをCH-1 (CH-2) VIDEO IN G／Yに，スペクトラムアナライザーをCH-1 (CH-2) VIDEO OUT 1 G／Yに接続します。つまりCH-1を調整する場合は実線のように接続し，CH-2を調整する場合は点線のように接続してください。

トラッキングジェネレーター，スペクトラムアナライザーを使用できない場合は，25 MHz正弦波発振器及びオシロスコープを使用してください。

25 MHz正弦波発振器が使用できない場合は高域成分を含むHDVS映像信号とオシロスコープを使用してください。

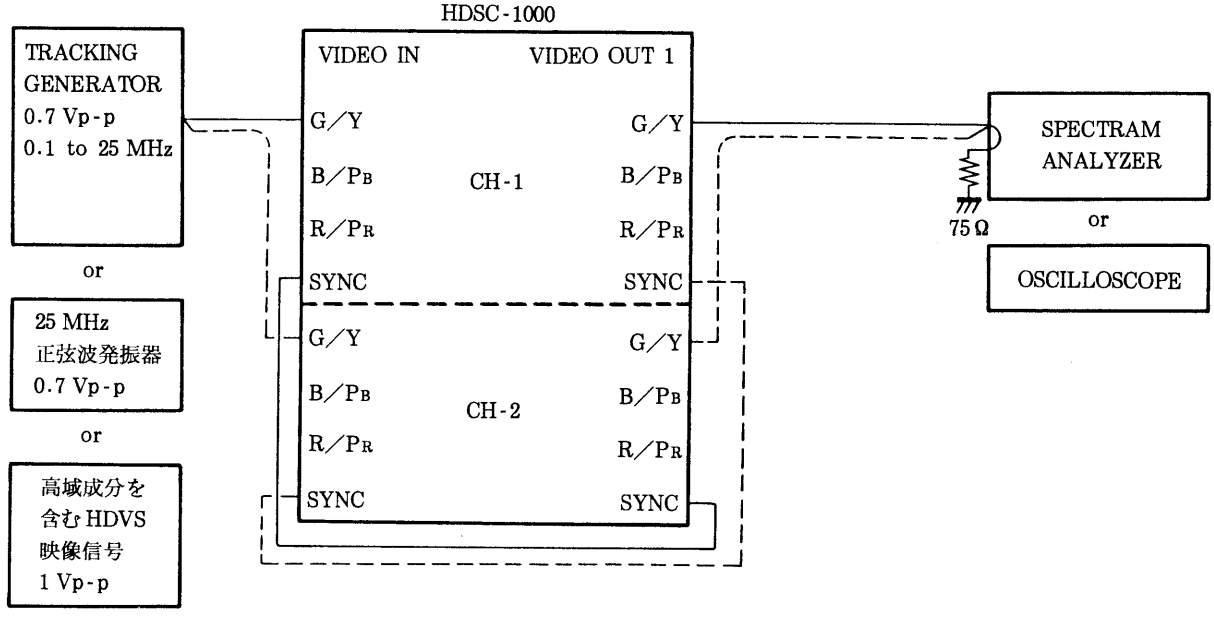

2−2. 調整

トラッキングジェネレーター，スペクトラムアナライザーを使える場合はAの方法で調整します。25 MHz正弦波を使う場合はBの方法で調整します。HDVS映像信号を使う場合はCの方法で調整します。

A．トラッキングジェネレーター，スペクトラムアナライザーを使用する場合。

CH-1 (CH-2) VIDEO OUT 1 G／Y

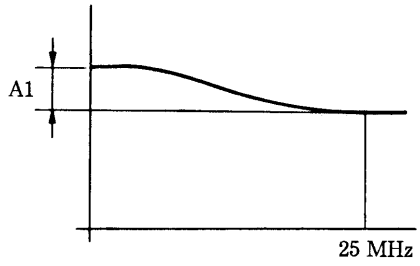

A1＝0±0.2 dB
◐CV500 (◐CV700)／SG-138

B．25 MHz正弦波発振器を使用する場合

CH-1 (CH-2) VIDEO OUT 1 G／Y

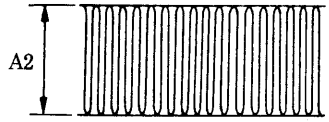

A2＝入力信号±2%
◐CV500 (◐CV700)／SG-138

C．HDVS映像信号を使用する場合

CH-1 (CH-2) VIDEO OUT 1 G／Y

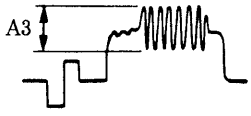

A3＝入力信号±2%
◐CV500 (◐CV700)／SG-138

3．B／P_B，R／P_R調整

B／P_B，R／P_R，についてステップ2と同様にして調整します。

B／P_B	◐CV510 (◐CV710)／SG-138
R／P_R	◐CV520 (◐CV720)／SG-138

4．SG-138基板のCH-1 (CH-2) VIDEO TESTスイッチをNORMに，操作パネルのCH-1 (CH-2) INPUTスイッチをVIDEO SYNCに戻します。

SECTION 2
INSTALLATION

2-1. UNPACKING AND REPACKING

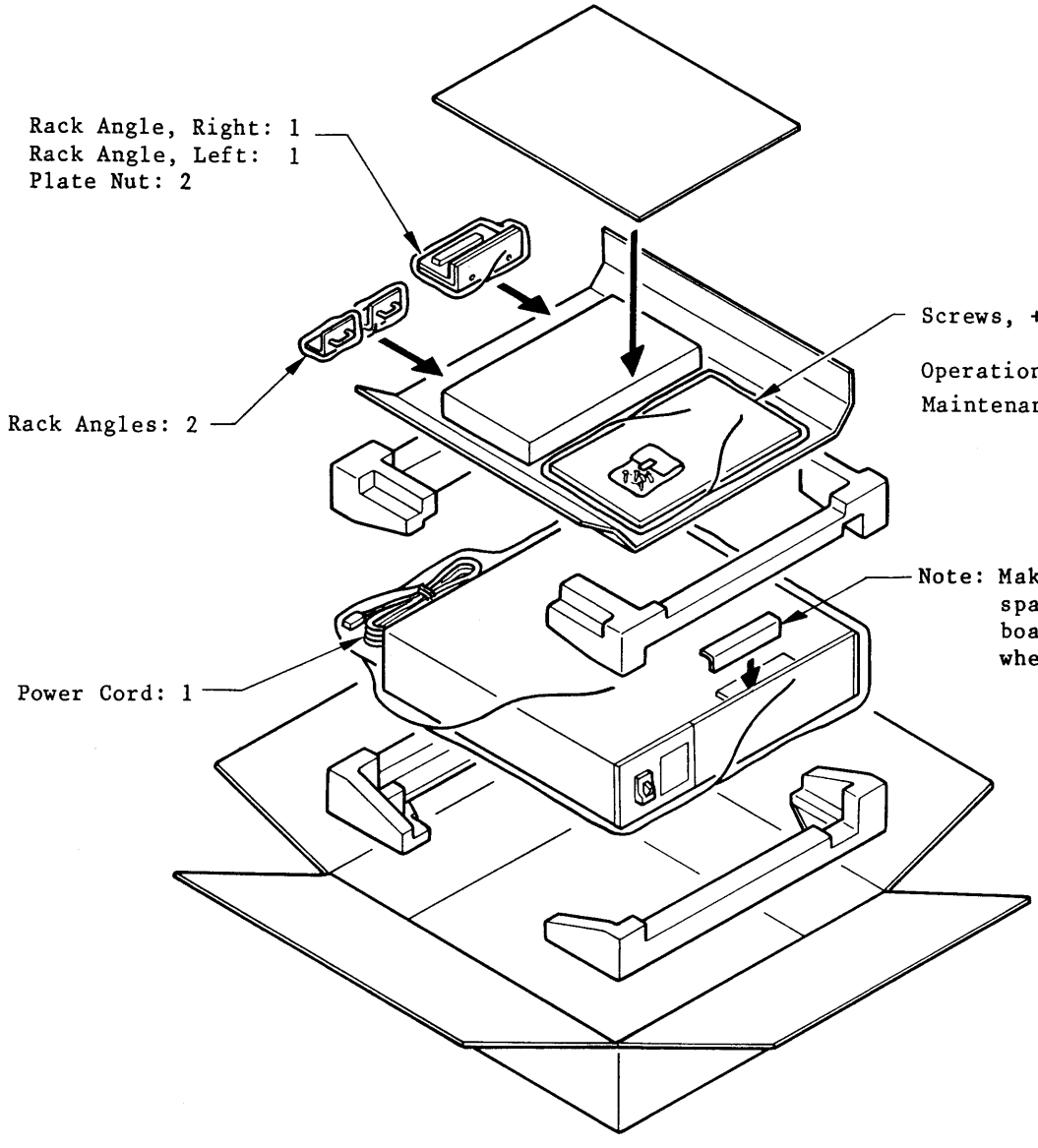

2-2. SUPPLIED ACCESSORIES

Rack Angle: 2
Rack Angle Left: 1
Rack Angle Right: 1
Plate Nut: 2
Screw B4x12: 4
K4x10: 4
A Handle and a set of securing screws for mounting the rack and the console unit

OPERATION AND MAINTENANCE MANUAL: 1
HDSC-1000 User's Guide and Service Manual

2-3. OPTIONAL ACCESSORIES

Sliding Rails for Rack Mounting: 2
ACCURIDE Model 203
Brackets for Rack Mounting: 4
ACCURIDE #5507-2
Rails and brackets for mounting HDSC-1000 to the rack.
The above parts should be ordered directly from the manufacturer:

STANDARD PRECISION INC.
12311 S, SHOEMAKER AVENUE SANTA
FE SPRINGS, CALIFORNIA 90670
TEL (213) 944-6236

2-4. POWER REQUIREMENTS

Power Line Voltage	AC100-120/220-240V switchable
100-120V mode	AC90 to 132V
220-240V mode	AC198 to 264V
Power Line Frequency	48 to 62Hz
Power Consumption	100W

2-5. OPERATING CONDITIONS

Operating Temperature $0^{\circ}C \sim +40^{\circ}C$
Storage Temperature $-10^{\circ}C \sim +60^{\circ}C$
Humidity 10% ~ 90% (non codensing)

Use in a dry, well ventilated place.

Please avoid installing in such places as indicated below.

. Room with high temperature or near sources of heat
. Place with dust or vibration
. Strong electrical field or strong magnetic field
. Place exposed to sunlight or strong direct light such as flash light

2-6. INSTALLATION SPACE

2-6-1. Installation Conditions

(1) Allow 15 cm or more behind the connector panel.
(2) Cables and other items should not be allowed to obstruct the fan screen on the rear panel.
(3) Do not place on heat generating objects such as power supplies.

2-6-2. External Dimensions

Front

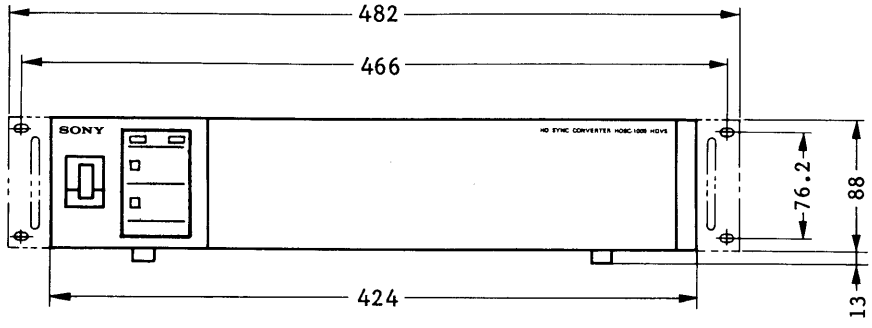

Right Side

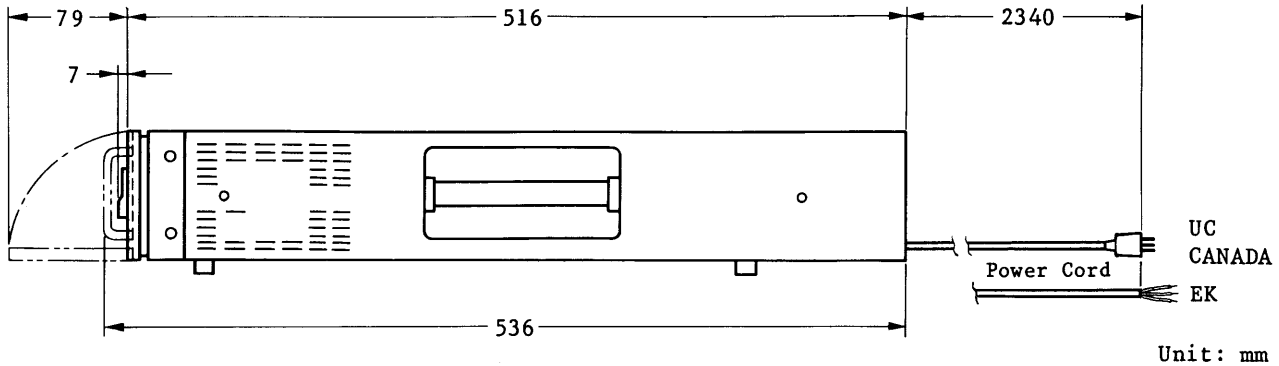

Unit: mm

Rack Mounting

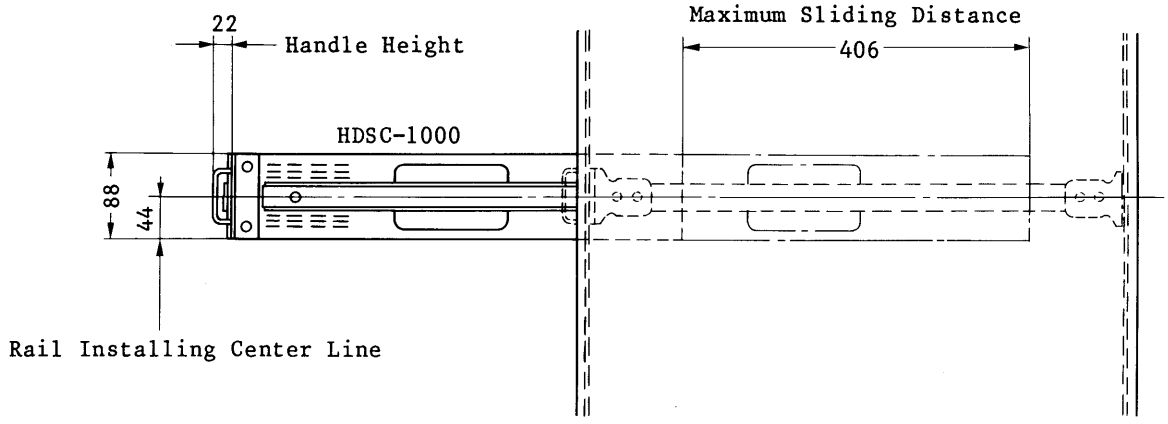

Unit: mm

Working Space

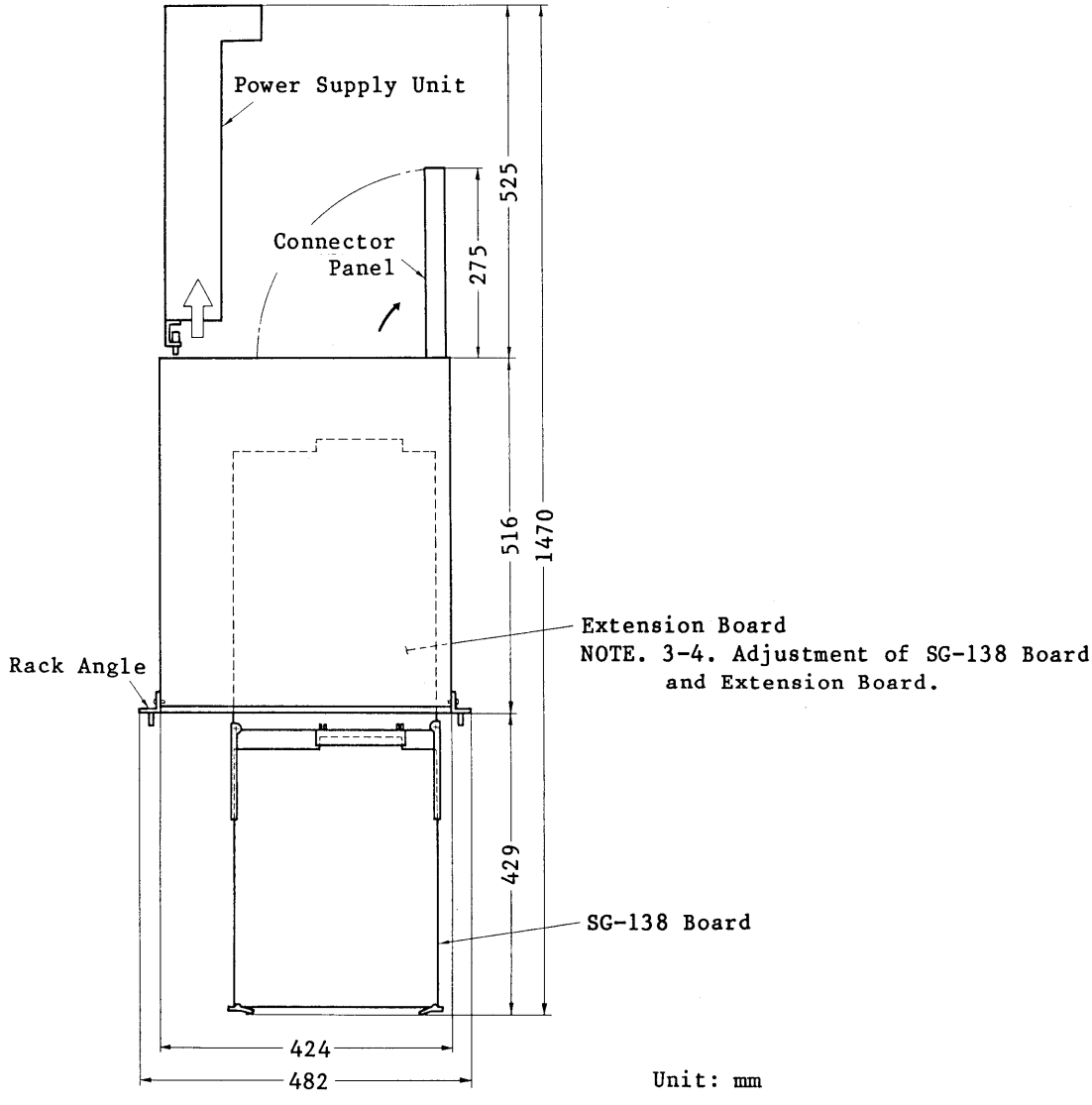

Unit: mm

2-7. RACK MOUNTING METHOD

Parts to be prepared

Slide Rails for Rack Mounting: 1 pair
(consisting of two inner members and two outer members)
ACCURIDE Model 203, length 22" (559 mm)

Brackets for Rack Mounting: 4
ACCURIDE #5507-2

Slide Rail/Inner Member Connecting Screws: 4
Supplied accessory +K4x10

Rack Angles: 2
Supplied accessory

Rack Angle Mounting Screws: 4
Supplied accessory B4x12

Rack Mounting Procedure

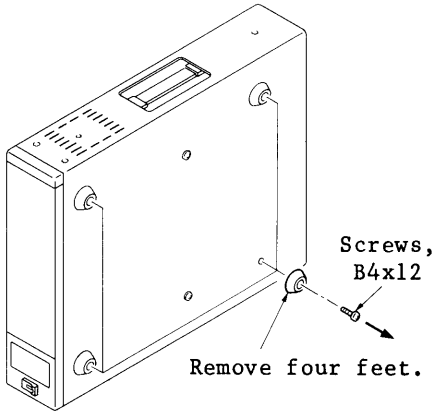

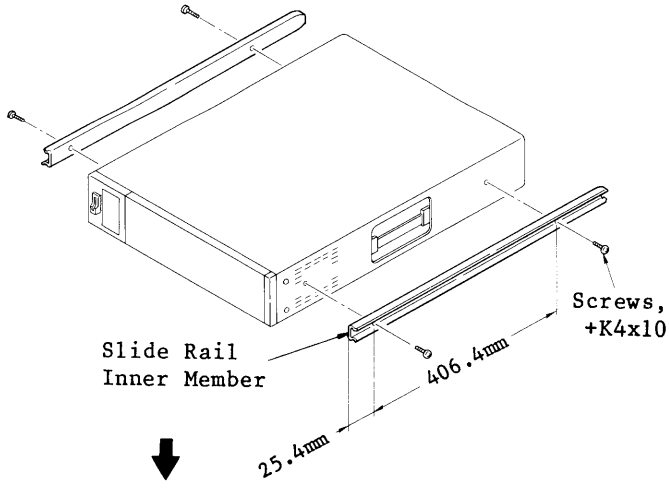

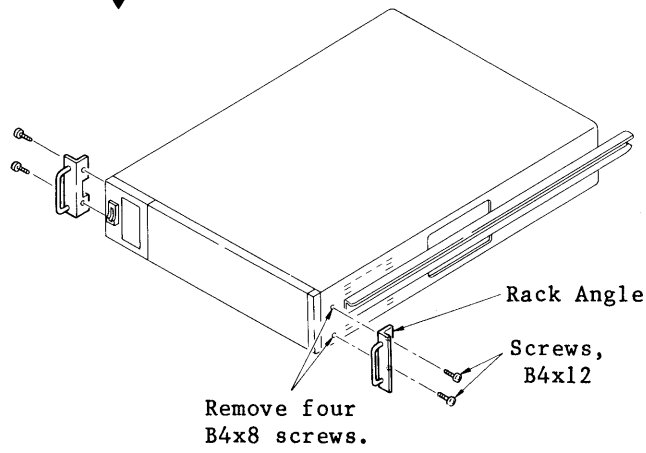

Fix the bracket to the outer member and mount the bracket to the rack as follows.

Note:
Use the fixing screws and rack mounting screws recommended by the slide rail manufacturer.

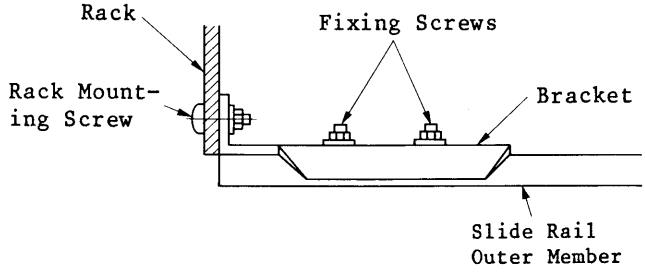

Mount the HDSC-1000 to the rack

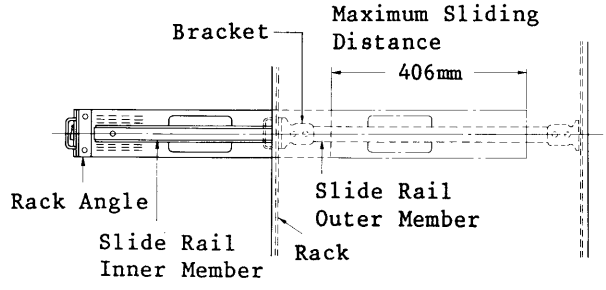

2-8. METHOD FOR MOUNTING TO THE CONSOLE UNIT SU-1010

Parts to be prepared

Rack Angle Right: 1

Supplied accessory

Rack Angle Left: 1

Supplied accessory

Plate Nut: 2

Supplied accessory

Securing Screw for Rack Angle: 2

Supplied accessory B4x12

Mounting Procedure

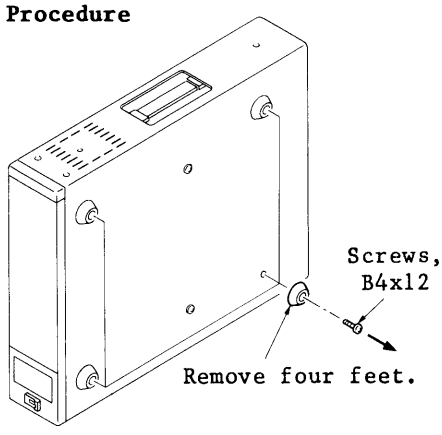

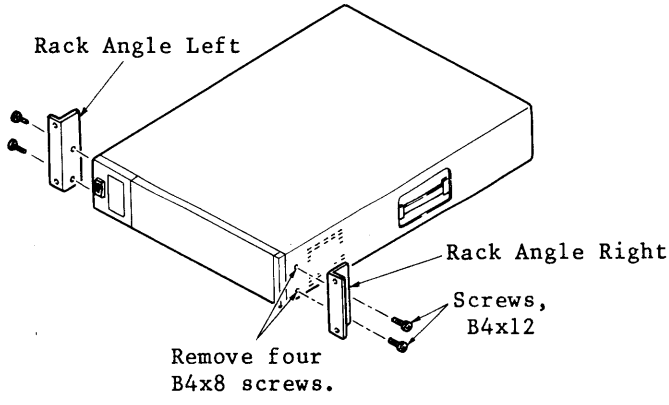

Open the flap door of the console unit, unscrew 3 screws and remove the handle mounting metals, right and left.

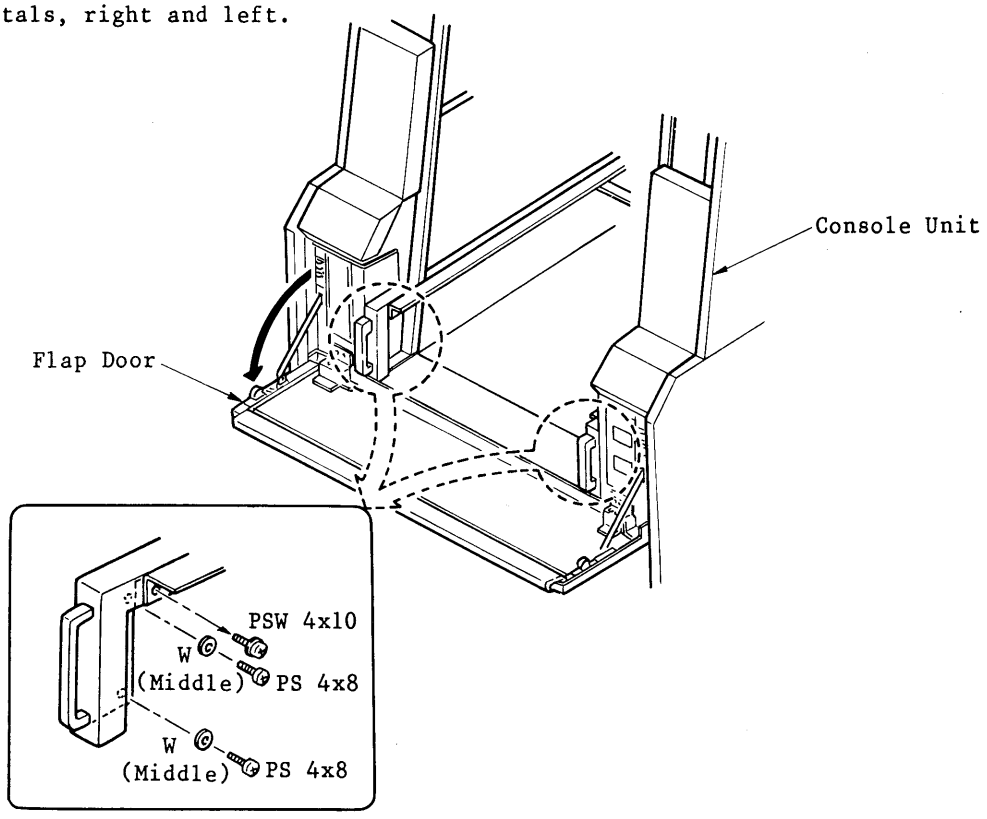

Unscrew 2 screws (PSW 4x10) that are fastening handles from the removed handle mounting metals, right and left, then remove the handles.

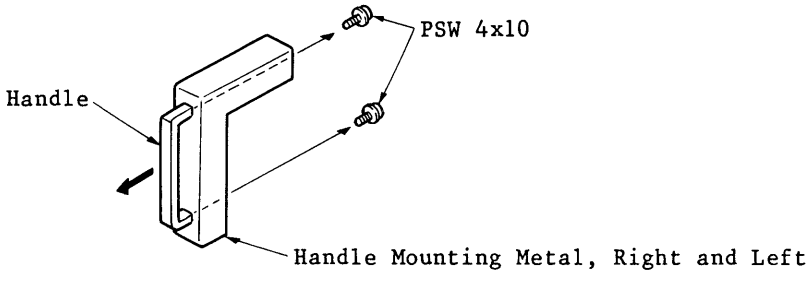

Peel off the top paper on the plate nut, match its screw holes to those of the handle mounting metal in the directions of the arrows, and stick the plate.

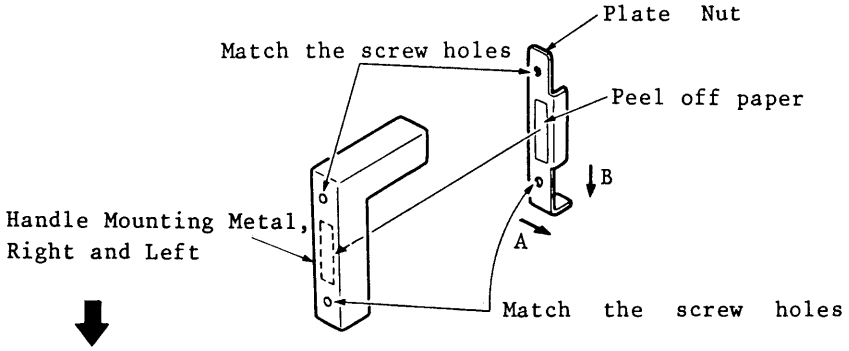

Remount the plate nut attached handle mounting metals, right and left, to the console unit with the 3 screws removed previously.

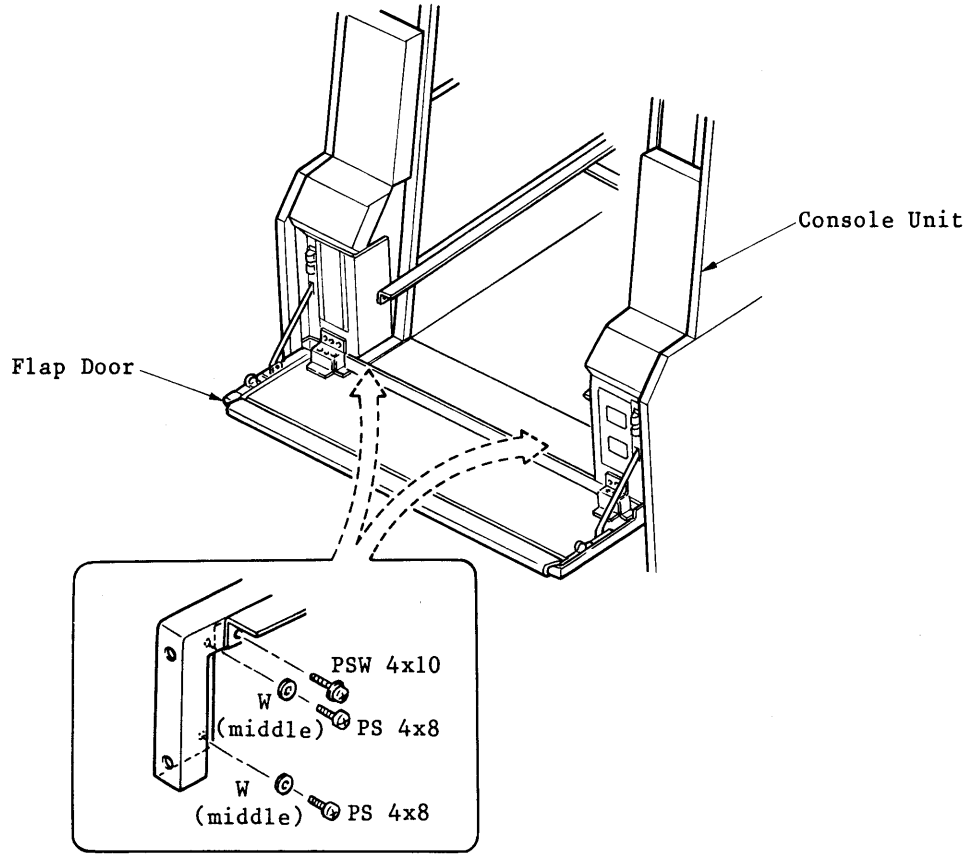

Load HDSC-1000 into the console unit and secure it with the screws (B4x8) that were fastening the side panels.

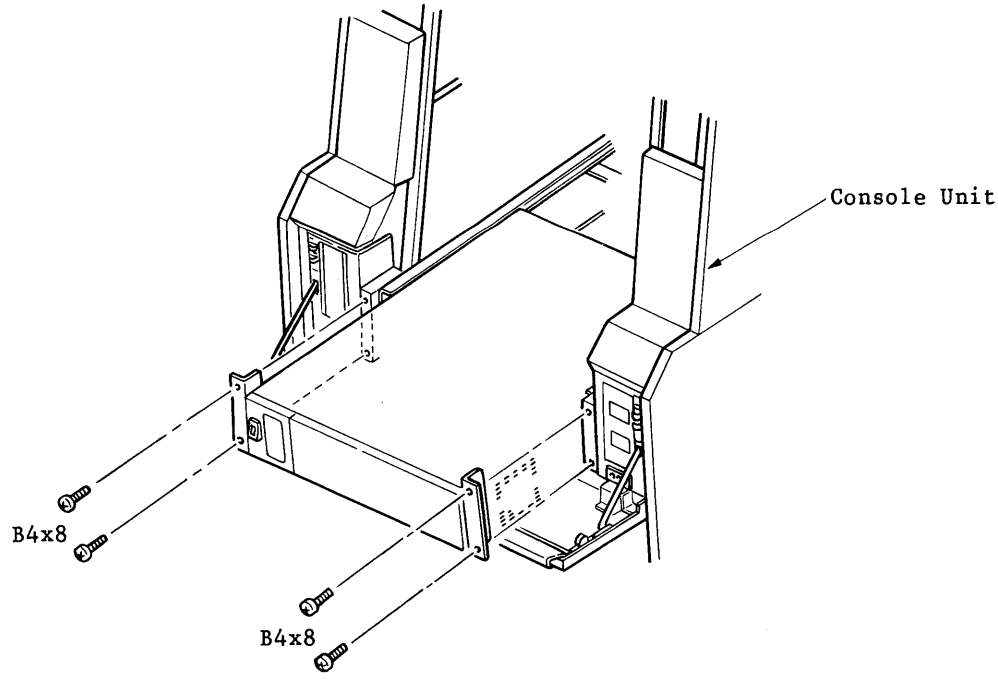

2-9. SWITCH SETTING

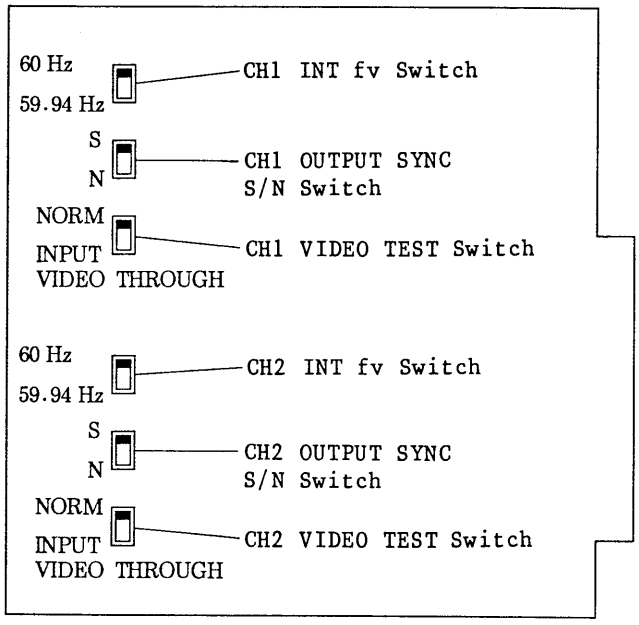

SG-138 Board

INT fv SWITCH (CH1, CH2)

Either 60 or 59.94Hz can be chosen for the internal field frequency during input silence. To select 59.94Hz, the mounting of VCO X1,X100, X300 (Option) is necessary. It is possible to select CH1 and CH2 separately but generally, they are set to 60Hz.

60Hz: Selects the internal field frequency of 60Hz during input silence.

59.94Hz: Selects the internal field frequency of 59.94Hz during input silence.

OUTPUT SYNC S/N SWITCH (CH1, CH2)

When BB(Black Burst) is selected by the OUTPUT switch on the operation panel, the signal of the old specifications is output. At this time, the old specifications, S or N, can be selected.

S: Selects the old specifications S.

N: Selects the old specifications N.

VIDEO TEST SWITCH (CH1, CH2)

It is possible to select the output of input signal through or the device converted synchronous signal.

CH1 and CH2 can be selected separately but cenerally, they are set to NORM.

NORM: Converted synchronous signal by the device is output.

INPUT VIDEO THROUGH: Input signal is output as is.

SECTION 3
SERVICE INFORMATION

3-1. PRINTED CIRCUIT BOARD LOCATION

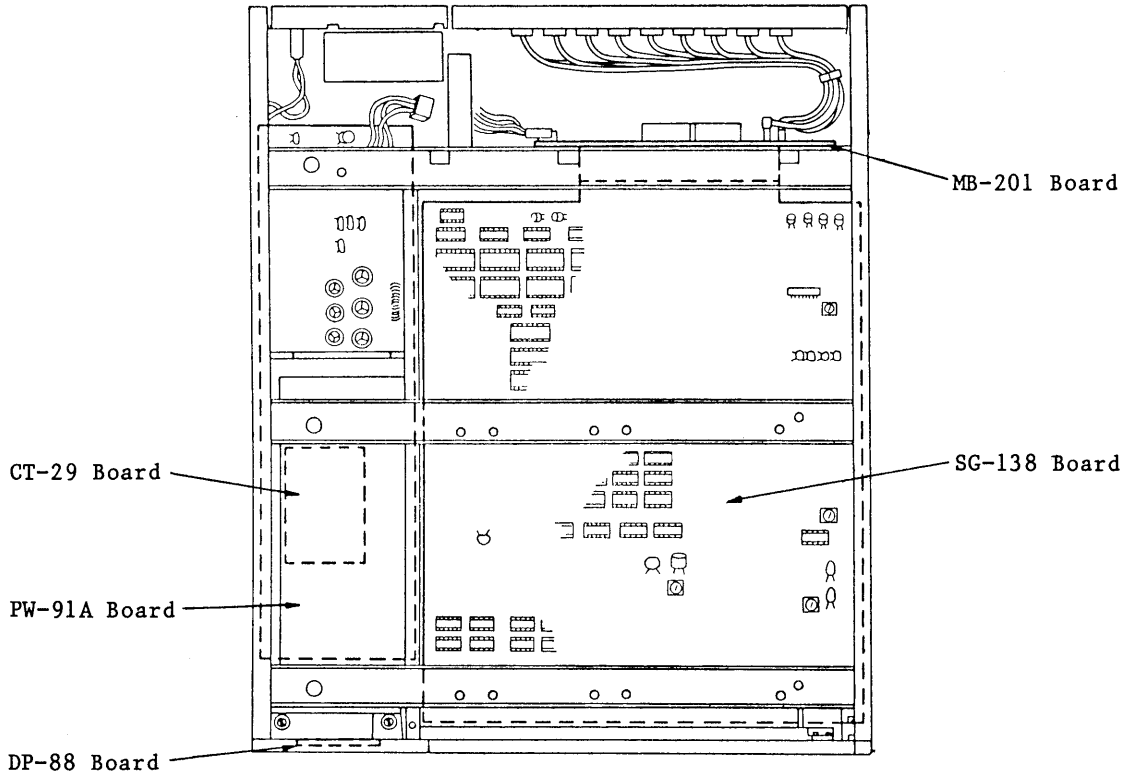

3-2. CABINET REMOVAL

3-2-1. Front Panel Removal

Push the upper part of the front panel to open it and push it again to close it. The front panel is designed to be removable so that the equipment may be used without it.

Push the front panel supporting lever using the finger or tip of a screwdriver to remove it.

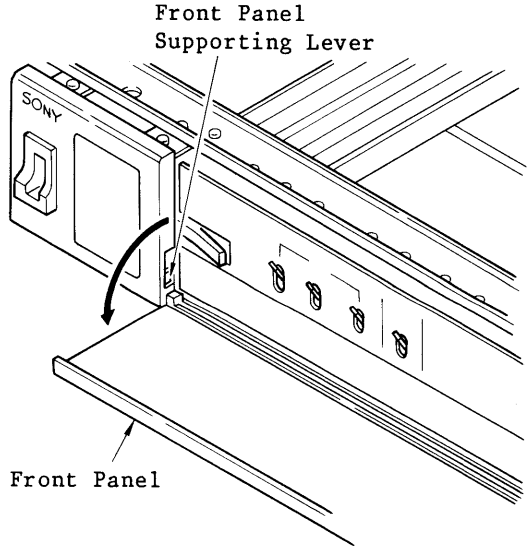

3-2-2. SG-138 Board Removal

Removal

(1) Move the lock lever in the direction indicated.
(2) Lift both left and right board levers.
(3) Pull out the boards.

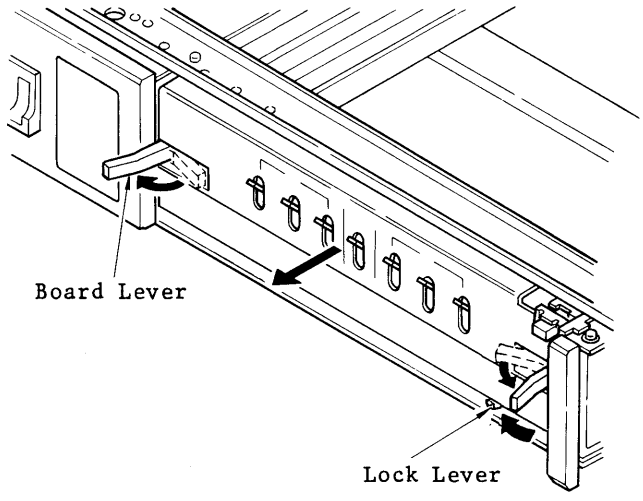

Installation

(1) Leave the lock lever moved in the direction indicated.
(2) Push in the boards leaving the board levers lifted and lay the levers inside when the boards are set.
(3) Move the lock lever to the right.

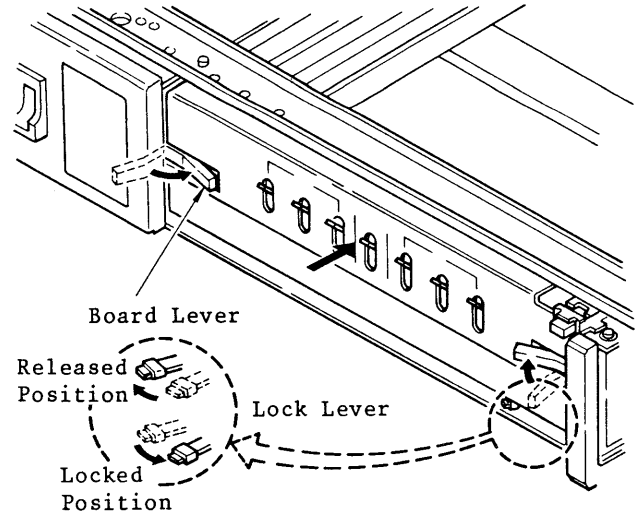

3-2-3. Connector Panel Opening/Closing

Loosen the two screws and open the connector panel as shown below.

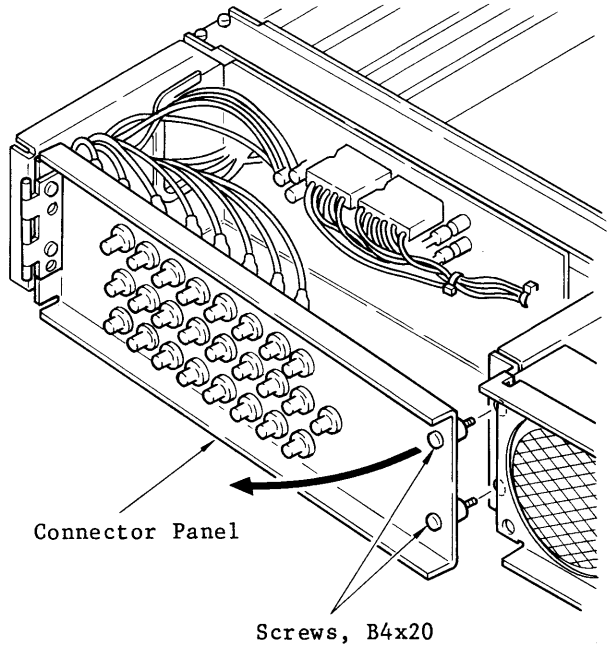

3-2-4. Side, Top and Bottom Cover Removal

When performing adjustment on SG-138 board, the panels should be taken off before starting.

Side and Top Cover Removal

(1) Remove the B4x6 screws (two on each side) and then remove side covers as shown below.

(2) Pull the top cover in the direction indicated.

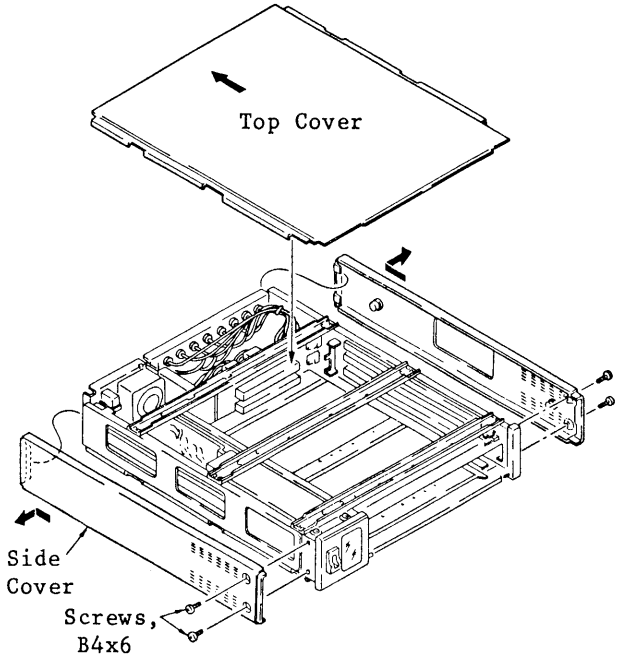

Bottom Cover Removal

(3) Remote the four feet and the two B3x6 screws.

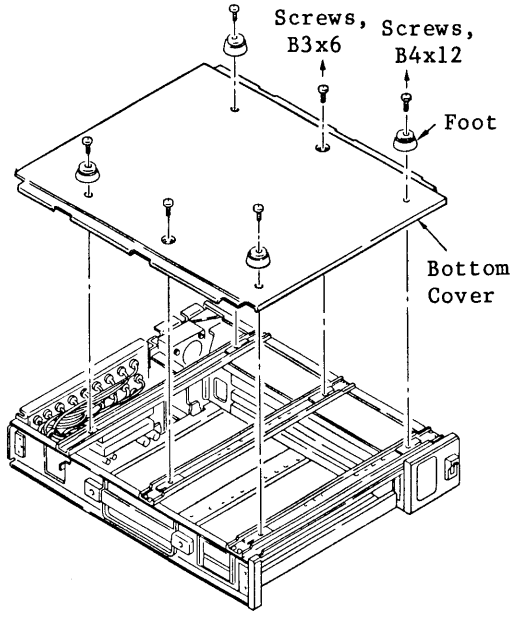

3-2-5. Indicator Panel Removal

After removing top and bottom covers, remove the four PSW3x6 screws as shown below.

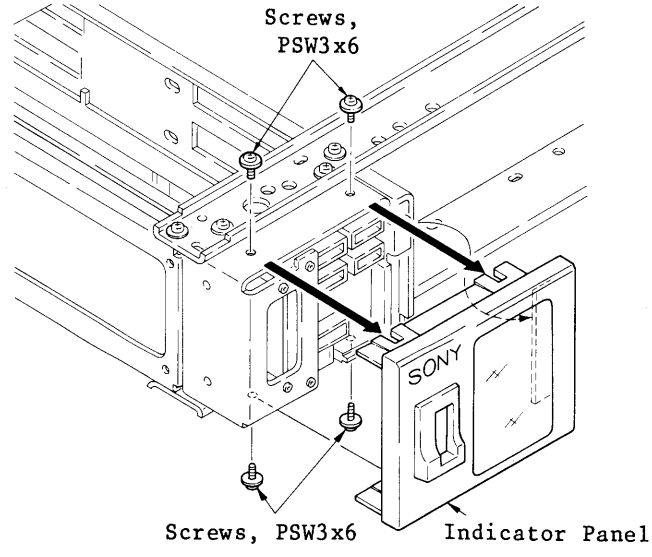

3-2-6. Power Supply Unit Removal

Open the connector panel and pull out the power supply unit following the procedure below:

(1) Loosen the B4x20 screw.
(2) Disconnect CN4, CN5 and the two spade terminals from the MB-201 board.
(3) Loosen the harness clamp and push into the power supply unit.

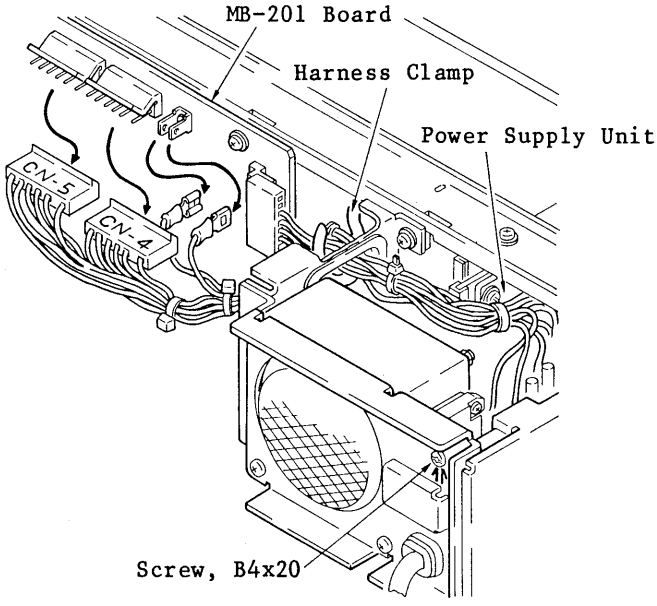

(4) Pull out the power suply unit in the direction indicated.

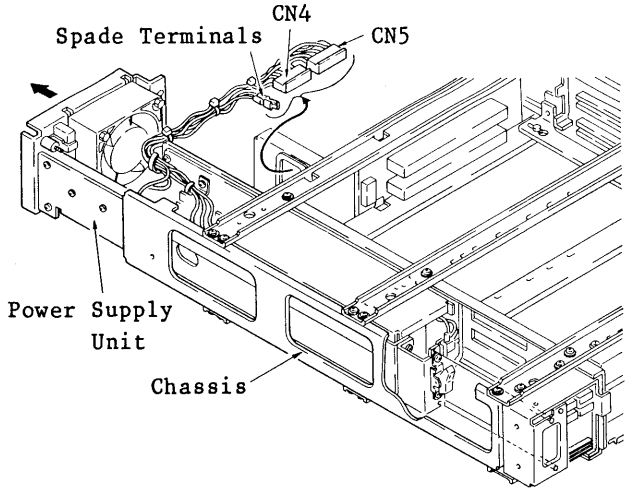

(5) **Power supply unit checking method**
After removing the power supply unit, place it on the equipment and connect CN4, CN5 and spade terminals to the MB-201 board. Then switch on the power supply in this condition.

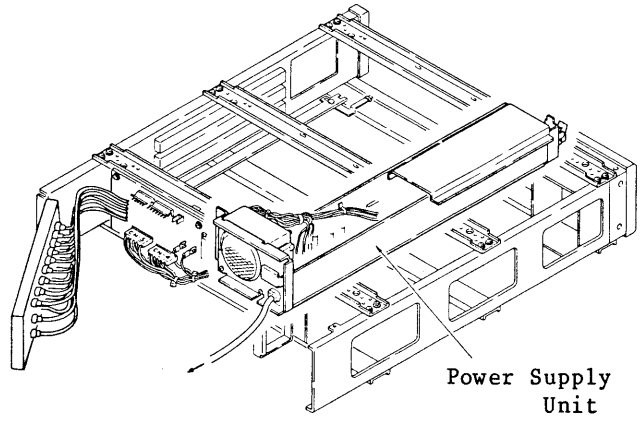

3-3. NOTES ON SERVICING

3-3-1. SG-138 Board Lock Mechanism

This model is equipped with a lock mechanism to avoid detaching the SG-138 board. Move the lock lever to the left to release the boards and to the right to lock them. When loading or detaching a board, first unlock and then use the board levers. See Section 3-2-2 "SG-138 Board Removal".

3-3-2. Notes on the Power Supply Unit

(1) Most of the circuits are in the primary side as this model's power supply is a switching regulator, so be careful to avoid electric shock. The primary is the area protected with a cover in the following figure.

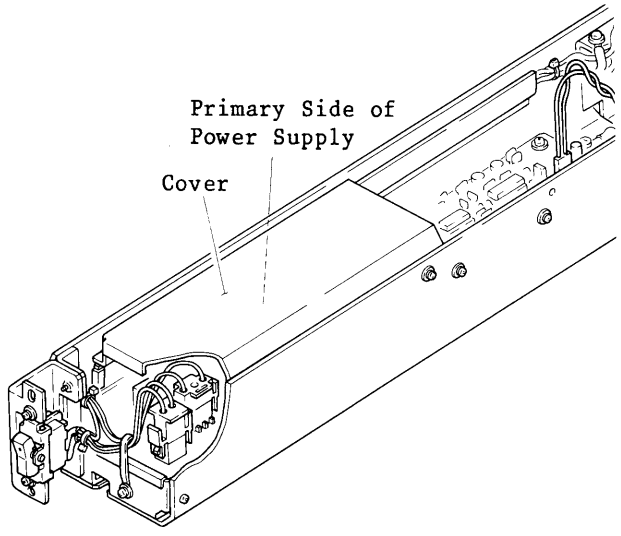

(2) There is a danger of shock even after switching off the power, due to remaining charge in the capacitors. Care is needed for about one minute after switching off.

(3) Perform checks with CN4, CN5 and two spade terminals connected to MB-201 board as operation of the power supply unit with no load could damage it.

(4) A breaker functions when the equipment is powered at AC220-240V with its voltage selector set to AC100-120V.

(5) The equipment does not operate if the input voltage is below the rated value, i.e., it will not operate at AC110-120V with its power voltage selector set at AC220-240V.

(6) If the power supply stops generating during use due to abnormal conditions, it will not restart unless switched on again. One minute or more must be allowed for restarting.

3-3-3. Note on Square Fixed Inductor

The following square fixed inductor appears similar to variable inductors, but those mounted on the printed circuit boards and those in stock as the repair parts are all set at the factory and must not be re-adjusted in the field.

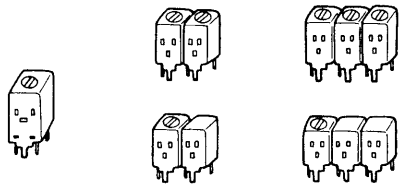

3-3-4. Notes on Repair Parts

(1) Safety Related Components Warning

Components indentified by shading marked with ⚠ on the schematic diagrams, exploded views and electrical spare parts list are critical to safe operation. Replace these components with Sony parts whose part numbers appear in this manual or in service bulletins and service manual supplements published by Sony.

(2) Standardization of Parts

Repair parts supplied from Sony Parts Center may not be always identical with the parts which actually in use due to "accommodating the improved parts and/or engineering changes" or "standardization of genuine parts".

This manual's exploded views and electrical spare parts list are indicating the part numbers of "the standardized genuine parts at present".

(3) Stock of Parts

Parts marked with "o" SP (Supply Code) column of the spare parts list are not normally required for routine service work. Orders for parts marked with "o" will be processed, but allow for additional delivery time.

(4) Units for Capacitors, Inductors and Resistors

The follwoing units are assumed in schematic diagrams, electrical parts list and exploded views unless otherwise specified:

Capacitors; µF

Inductors; µH

Resistors; ohm

3-4. ADJUSTMENT OF SG-138 BOARD AND EXTENSION BOARD

The adjustment of SG-138 Board should be performed with the panels removed in "Section 3-2-4".

HDSC-1000 does not have its own extension board but the extension board of BVT-800 can be restructured as follows, then it can be used.

Restructuring method of the extension board EB-9 (For A-6252-047-A; NTSC)

Remove diode D1, 3, 4 and 5.

Restructuring method of the extension board EB-9A (For A-6252-050-A; PAL, SECAM)

Remove diode D1, 3 and 5.

3-5. SIGNAL FOR CHECKING AND ADJUSTMENT

Since there are circuits of 2 channels, 1 channel can be used as the signal source for this. For detail, please refer to 'Section 8 Adjustment of Sync Conv'.

SECTION 4
THEORY OF OPERATION

4-1. OUTLINE

The HDSC-1000 sync converter functions to convert the synchronizing signals based on the newly established standard (BTA S-001) for 1125/60 high-definition television systems into the two types of synchronizing signals which were used in the past prior to the adoption of the new standard, and vice versa. If the field frequencies of the sync signals tally, the unit also enables one of the two types of conventional synchronizing signals to be converted into the other, and vice versa. For each of two channels, the sync converter is composed of a sync generator circuit which is locked to the input sync signal and generates the required output sync signal and a video circuit which replaces the sync signal in the video signal with the signal which is output from the sync generator. Also included are a display circuit which indicates the operating status and a power supply circuit. The sync generator circuit and video signal circuit are housed on the SG-138 board, and the display circuit is provided on the DP-88 board. The power supply circuit is contained on both the PW-91A and CT-29 boards.

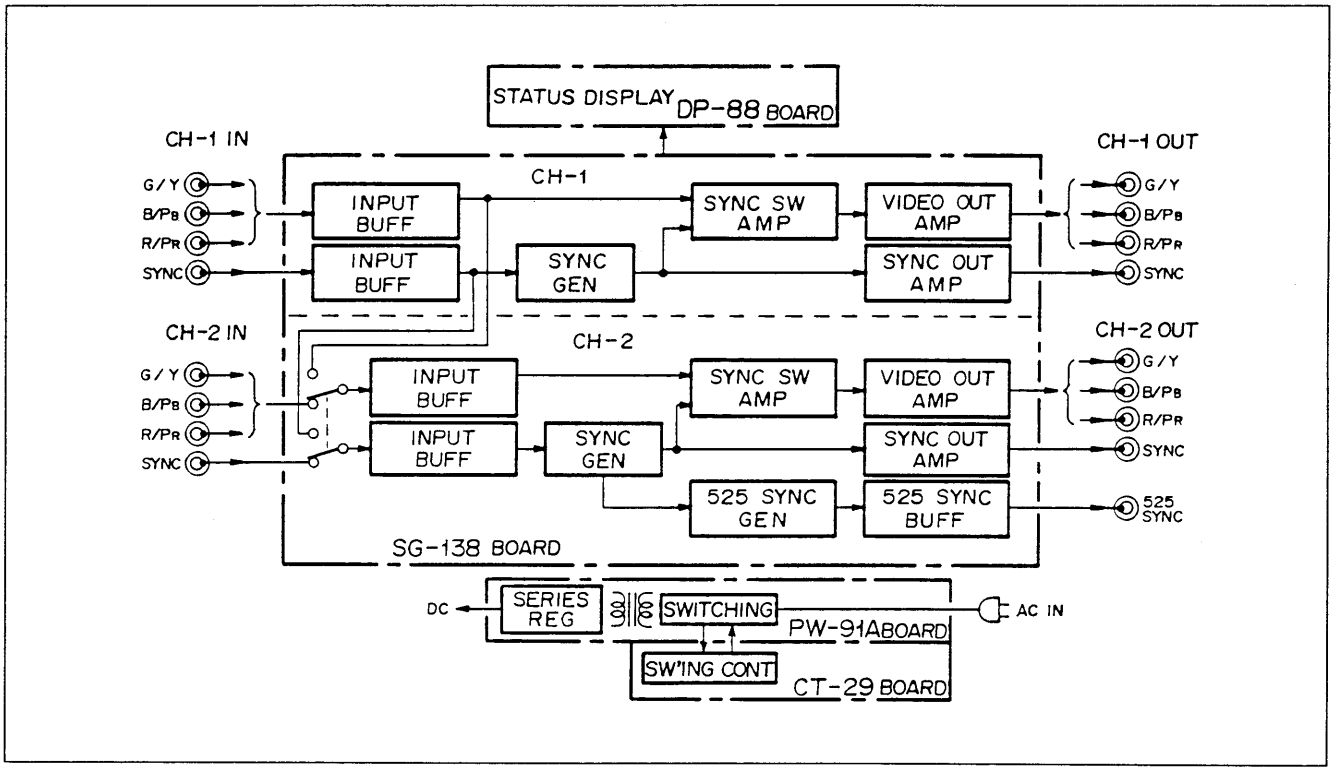

Fig. 4-1 HDSC-1000 Block Diagram

Table 4-1 shows the various differences between the "International Exposition/Tsukuba" formatted sync signal conforming to the preceding standard (hereafter referred to as the "preceding format N" or "N sync signal"), the sync signal which was based on Sony's signal generator standard (hereafter referred to as the "preceding format S" or "S sync signal") and the tri-level bipolar sync signal which conforms to the new standard. The horizontal phase relationships are shown in Fig. 4-2 and the vertical phase relationships are shown in Fig. 4-3. The sync signals are converted as described below.

(1) A 0.585usec black signal is added at the left and right of the new standard picture while the center of the picture is made unchanging in the horizontal direction.
(2) Ten of the 1045 effective scanning lines under the preceding standard serve as the excess signal during horizontal blanking under the new standard.
(3) The vertical phase relationship is such that the picture center is shifted by an amount equivalent to (3.5-2)/2=0.75H with respect to the new signals.

The vertical phase relationship of the 525 sync output signal used by editing equipment is the same as that for the Sony HDV-1000/HDT-1000.

The field frequencies of the signals applying both before and after they are converted must tally. Consequently, when converting a preceding format N signal, either the field frequency of the signal source is converted to 60.00Hz or an optional setting 59.94Hz voltage-controlled oscillator (VCO) must be added to the HDSC-1000 sync converter. When the VCO is added, the sync converter automatically identifies and is locked to the input signal which has a 59.94Hz or 60.00Hz field frequency.

With this particular sync converter, the sync signals in the CW and CN signals of the preceding format N have been made identical to the sync signals in the Y signal.

	Preceding format N ("International Exposition/Tsukuba" sync signal standard)	**Preceding format S** (sync signal based on Sony's signal generator standard)	**New standard** (tri-level bipolar sync signal)
Effective scanning lines per frame	1045 lines	1045 lines	1035 lines
Horizontal blanking width	4.94us	5.2µs	3.77µs
Vertical blanking width	40H	40H	45H
Aspect ratio	5:3	5:3	16:9
Field frequency	59.94Hz	60.00Hz	60.00Hz
Video signal format	Y/CW/CN	G/B/R	G/B/R or Y/PB/PR

Table 4-1 Differences between New and Old Standards

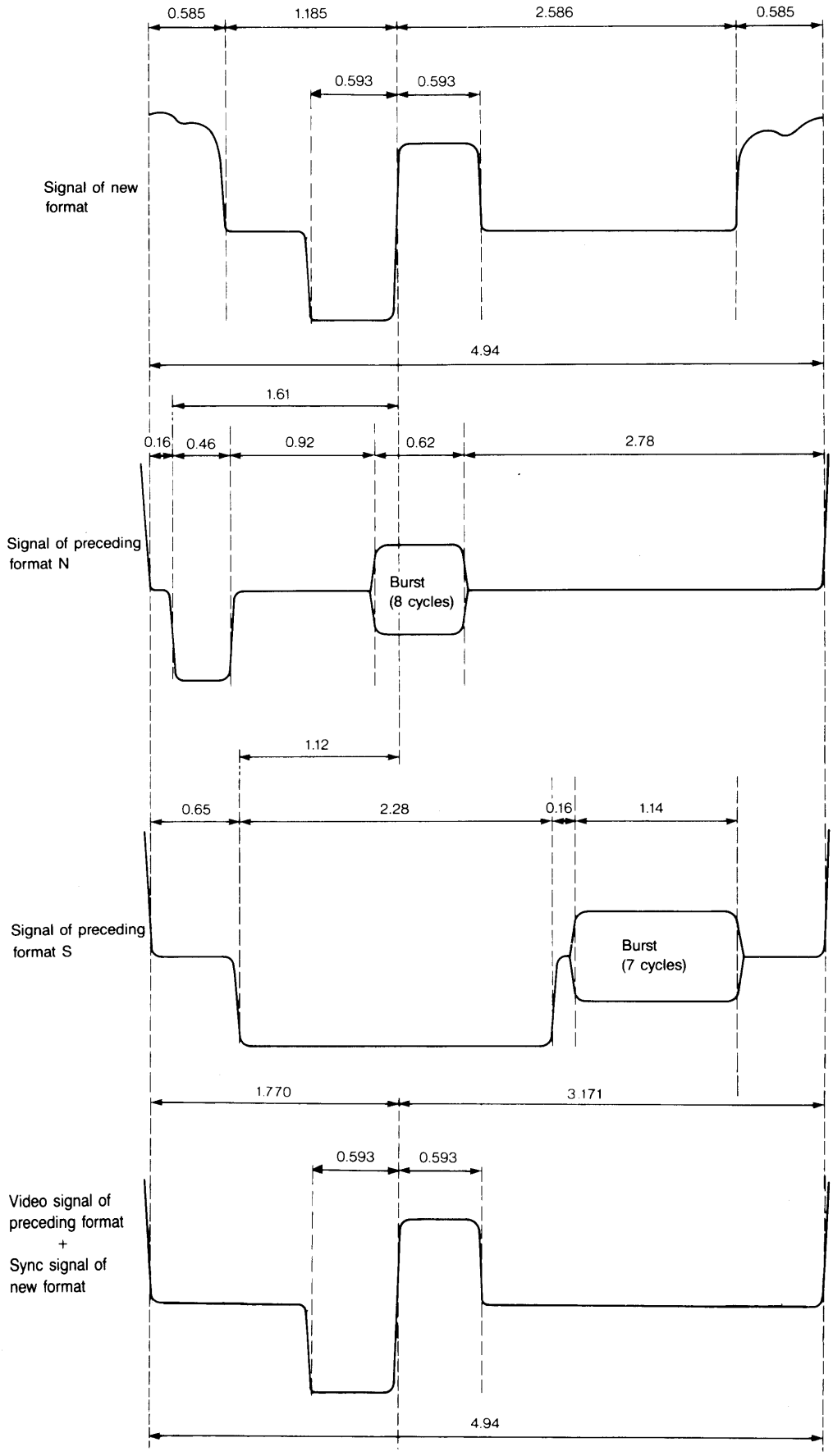

Fig. 4-2 Horizontal sync phase relationships between new and preceding format signals [unit: μsec]

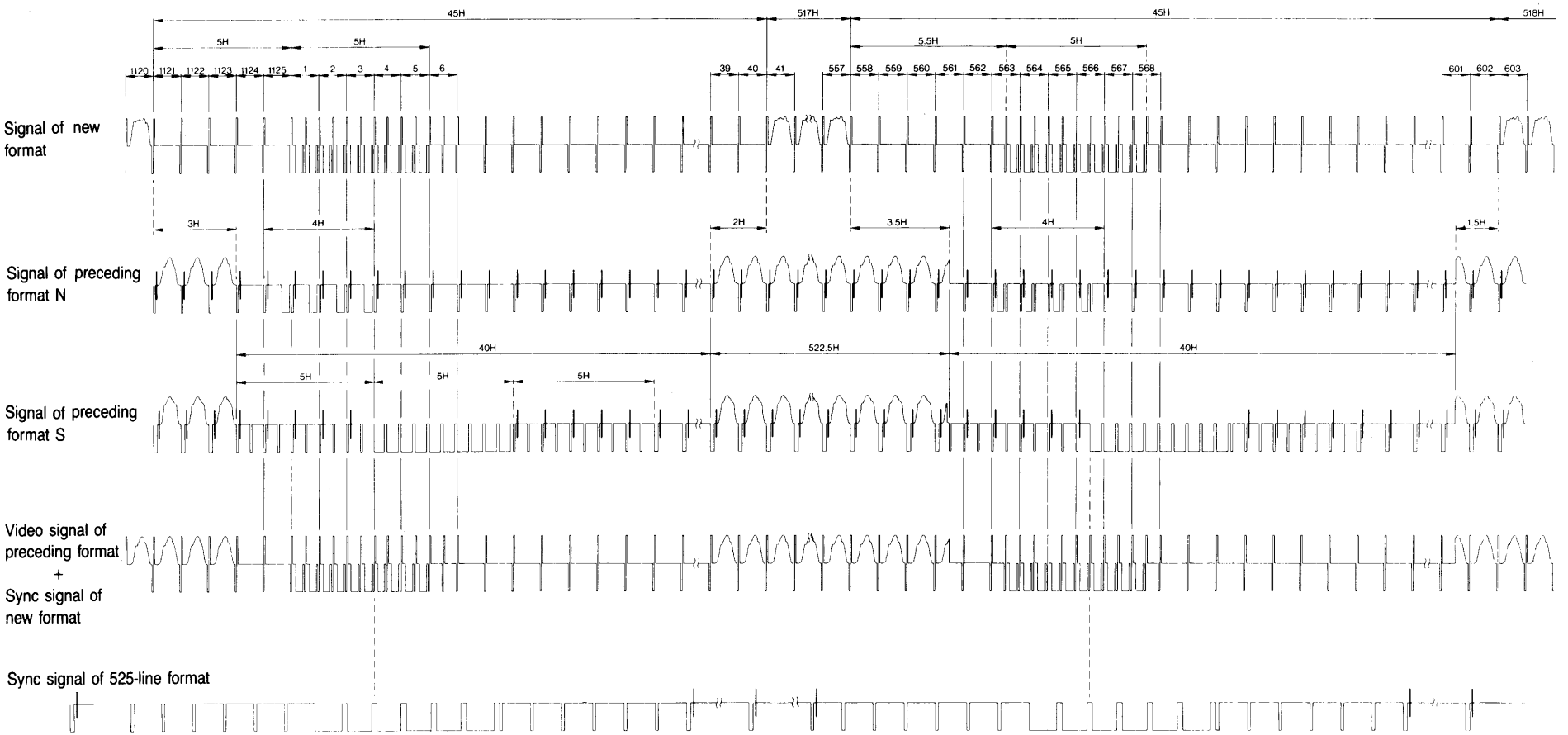

Fig. 4-3 Vertical sync phase relationships between new and preceding format signals

4-2. SYNC GENERATOR

Channels 1 (CH-1) and 2 (CH-2) have identical circuitry and so the description is confined here to the CH-1 circuitry.

4-2-1. Input Selector

The input selector circuit determines whether either the VIDEO G/Y signal or the REF SYNC signal is to be used.

Relay RY101 is opened and closed by switch S1 to select the input sync signal. The REF SYNC signal is supplied to relay RY101 through input buffer Q101 and 102. The VIDEO SYNC signal is supplied to relay RY101 through the buffer of the video input circuit.

Q111 is the buffer which supplies the CH-1 REF SYNC signal to CH-2. CH-2 is provided with relay RY301 which selects the CH-1 REF SYNC signal and CH-2 REF SYNC signal by means of switch S4. When S4 has been set to the [NORM] position, CH-1 and CH-2 operate independently but when it is set to the [1→2] position, the CH-1 REF SYNC signal is supplied to CH-2 and the two systems operate in parallel.

4-2-2. Preceding Format Sync Separator

The input sync signal which has been selected by the input selector is amplified approximately 6-fold by ICF2 and the burst is filtered out by the low-pass filter which is composed of L101, C120 and C123. The pedestal level of the input signal which has passed through buffer ICF3 is clamped to 0V by ICG3, D105, D106 and Q104, this is followed by rough sync separation in ICE4, and the sync tip sample pulses used for the main sync separation are created. Clamp pulses are generated from the ICE4 output by monostable multivibrator ICH9 and these sent to the main pedestal clamp circuit and video input signal clamp circuit. The buffer ICF3 output is supplied to ICF4 and the pedestal is clamped to 0V by the clamp pulse created by ICH9. Furthermore, the sync tip potential is detected by sample and hold circuit ICE5 and F5 and its voltage is halved by R152 and R163. The signal whose pedestal level is clamped at 0V and half the potential of the sync tip are compared by ICG5 and the sync signal appears at pin 7 of ICG5. This process provides for accurate sync separation which remains unaffected by any fluctuations in the input voltage.

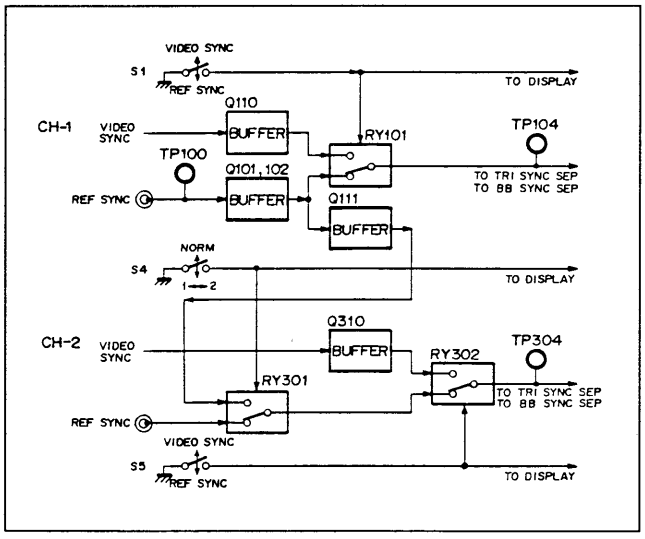

Fig. 4-4 Input Selector

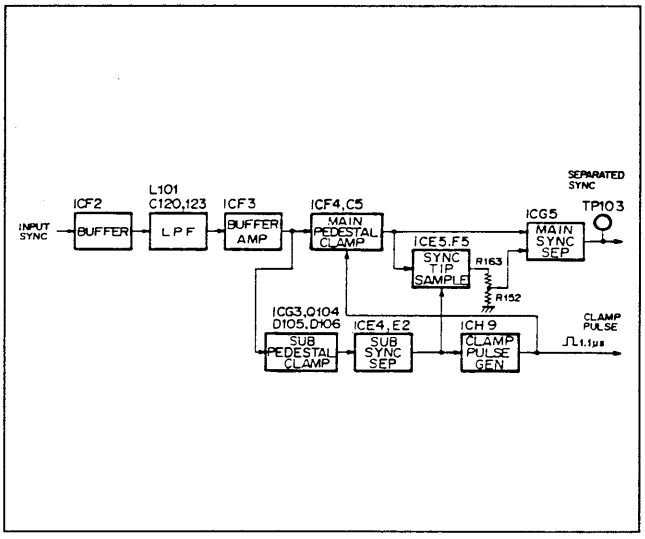

Fig. 4-5 Preceding Format Sync Separator

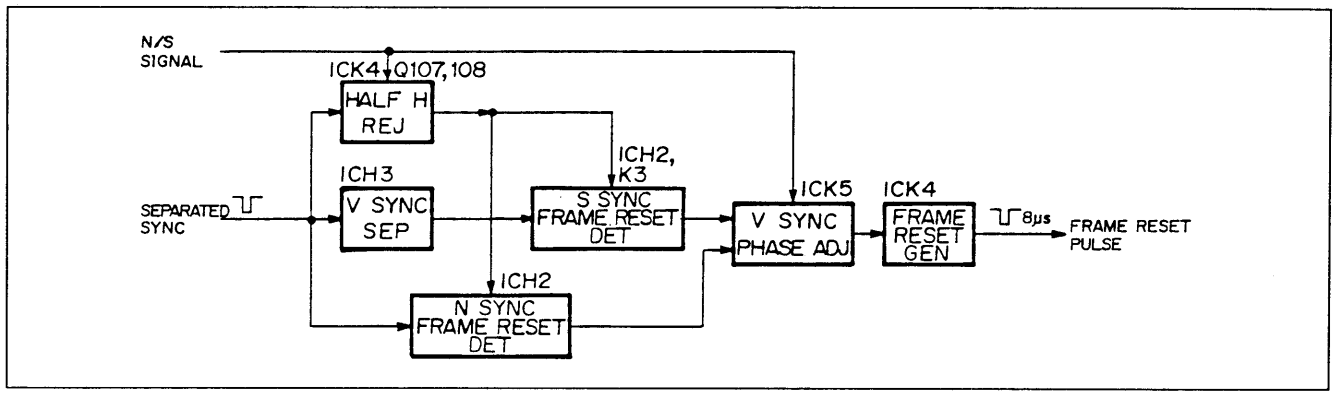

Fig. 4-6 Preceding Format Frame Separator

4-2-3. Preceding Format Frame Separator

The half H pulses in the vertical blanking period are rejected from the separated sync signal by ICK4, Q107 and Q108, and the H pulses are generated. There is a difference in the position of the equalizing pulse depending on whether the N or S sync signal is supplied and so the ICK4 time constant is selected by Q107 and 108.

If the S sync signal is supplied, the V sync signal is separated by ICH3, R145 and C139, and the frame pulse is provided at pin 11 of ICK3 by latching the H pulse at the V sync signal rise. If, on the other hand, the N sync signal is supplied, the frame pulse is provided by latching the sync-separated signal directly with the H pulse. The separated frame pulse is supplied to pins 6 and 7 of ICK5 and the vertical phase relationship is controlled as shown in Fig. 4-3. ICK4 shapes the ICK5 output pulse width to 8usec to form the frame reset pulse which resets the V counter.

4-2-4. Burst Separator

A band-pass filter is used to separate the burst signal from the input sync signal which has passed through buffer ICF6. Two band-pass filters, one for the preceding format N and the other for the preceding format S, are used. The separated burst signal is converted to the TTL level by ICC7, A7 and D4, only one cycle at the center is taken out by ICA6 and the signal is used as the PLL reference pulse (REF H). The burst pulse is selected by the circuit composed of ICH5, Q105 and Q106.

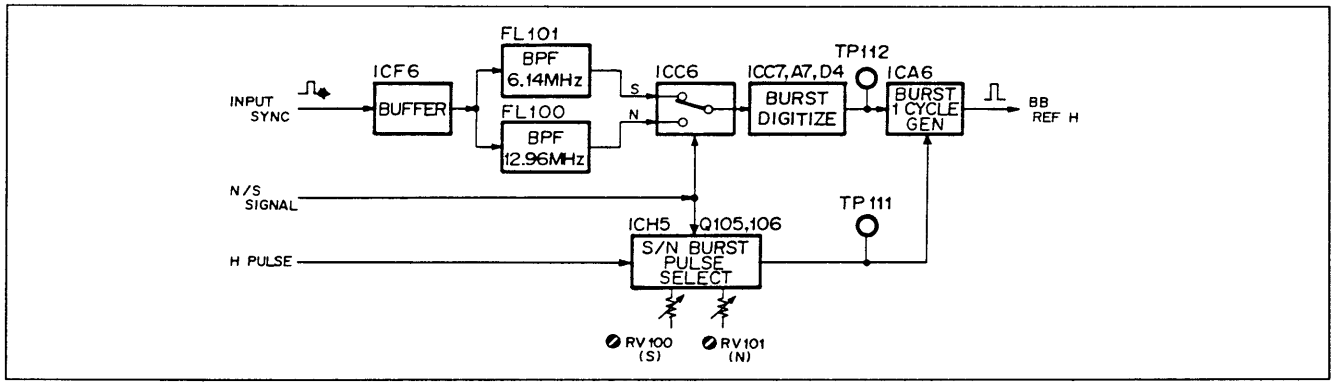

Fig. 4-7 Burst Separator

4-2-5. New Format Sync/Frame Separator

The input sync signal which has passed through the input selector is first amplified to approximately 6-fold by buffer amplifier ICA2. Its pedestal is then clamped to 0V by ICA1, D100, D101 and Q100, and then the negative pulse at the start of the tri-level sync signal is separated by ICA3. The H pulse, formed by removing the HALF H pulse from this signal, is obtained at pins 6 and 7 of ICA5, and this is used for frame pulse separation and for generating the clamp pulses and enable pulses for main sync separation. The pedestal potential of the input sync signal, which has been output from buffer ICA2, is clamped to 0V. Next, the rise part of the tri-level sync signal is detected by high-speed comparator ICD3 and accurate sync separation follows. This comparator is provided the enable pulse which is created at pin 10 of ICA5 and which has been converted to the ECL level by R167, 136 and 135. The enable pulse provides a 730usec window the rise part of the tri-level sync signal to make the operation more accurate.

Meanwhile, the V sync signal is separated from the ICA3 output by ICH3, R129 and C127. The separated V sync signal is supplied to pin 3 of ICK6 where the H pulse is latched at its leading edge. As a result, the frame pulse is obtained at pin 8 of ICK3. As shown by the vertical phase relationship in Fig. 4-3, the frame pulse is controlled by ICH6. ICK8 shapes the pulse width to 8usec to form the frame reset pulse which serves to reset the V counter.

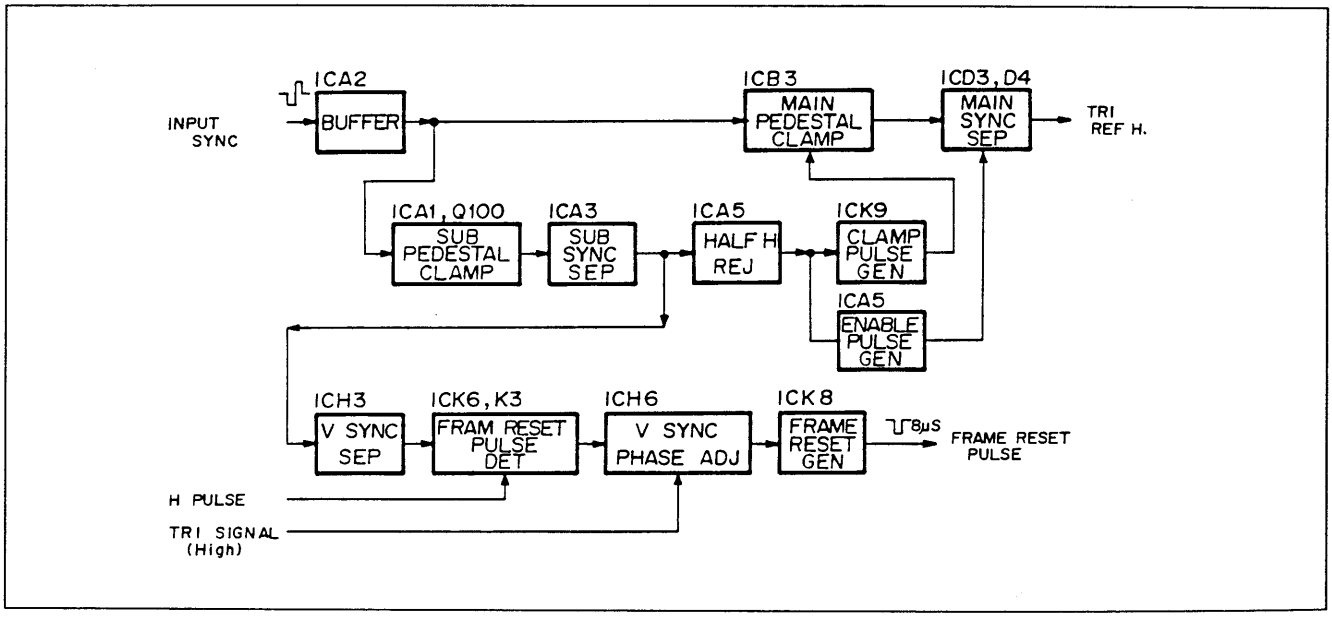

Fig. 4-8 New Format Sync/Frame Separator

4-2-6. Phase Comparator and VCO

One of the tri-level, format N and format S sync signals which have now been separated is selected by ICA4 to form the REF H signal. ICA4 is also used as a new/preceding format signal selector switch for the frame reset pulse and input clamp pulse. The REF H signal is supplied to pin 6 of phase comparator ICC8 while to the other input pin--pin 7--of the phase comparator is supplied the count H signal which has been read from the ROM and which has passed through the phase adjustment circuit. When the preceding format S signal is the input sync signal which has been selected, there is no burst signal in the V sync pulse period and so during this period the DISABLE pulse which stops the operation of the phase comparator is supplied to pin 1 of ICH13. When an external input signal is available and the operating mode has been identified as the external lock mode, analog switch ICA8 is set to ON and the phase comparator output is used to control the VCO. When an external signal is not supplied, a 2.0V DC voltage is supplied from ICB9 and the VCO generates a fixed frequency. The 69.12MHz VCO installed in the HDSC-1000 is designed for the field frequency of 60.00Hz. However, when a 69.05095MHz VCO for the 59.94Hz field frequency is added to the SG-138 board, the VCO is automatically selected by the VCO selector switch composed of Q112, 113, 114 and 115 in accordance with the field frequency of the input signal.

The VCO output passes through buffer ICC10, it is converted to the TTL level by ICC11, and it is used as the clock signal for the D/A converter which is used to output the preceding format sync signal. Furthermore, after its frequency has been divided down to 1/2 and 1/4 by counter ICE9, it is used as the read clock signal of the ROM for generating the new/preceding format sync signals.

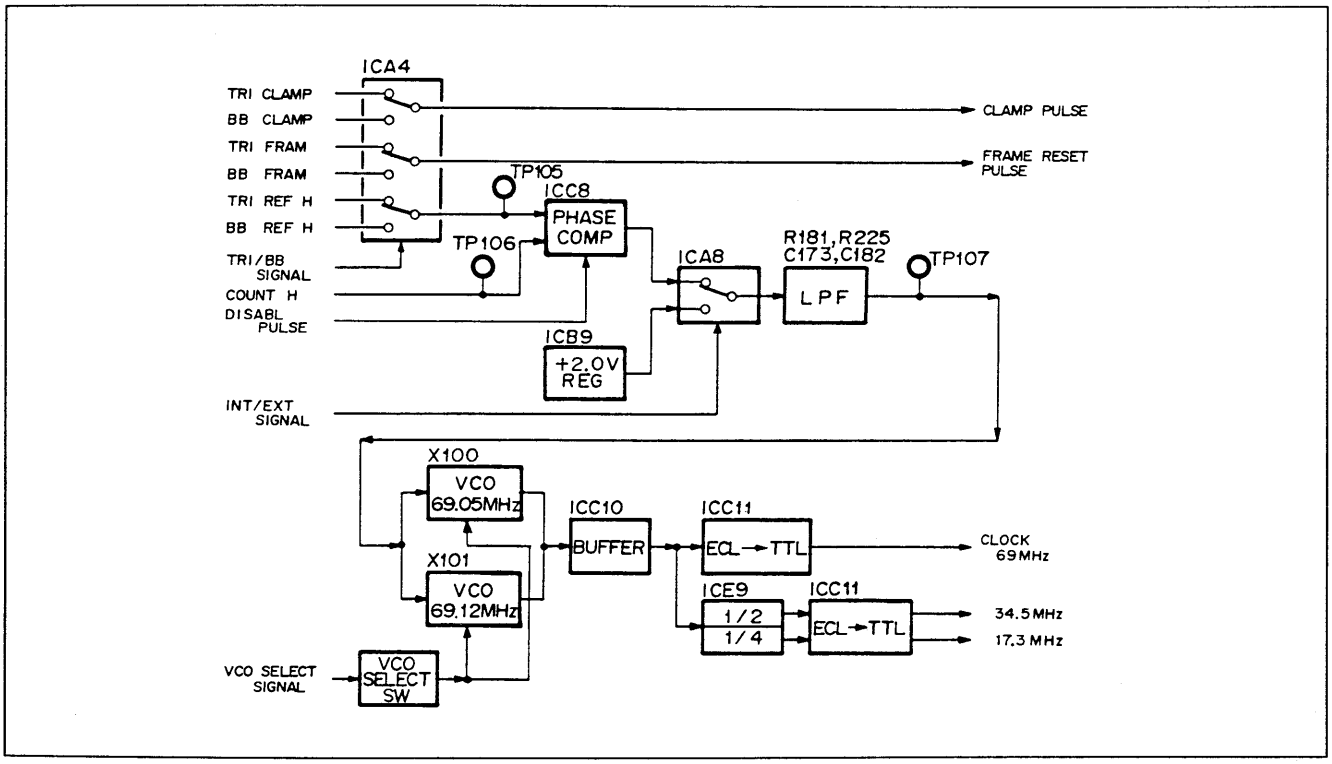

Fig. 4-9 Phase Comparator and VCO

4-2-7. Input Sync Signal Detector

This circuit serves to identify whether the input signal is present or not (INT/EXT), to identify the type of sync signal (tri-level/ N/S) and to identify the field frequency (60/59.94Hz) of the sync signal. In accordance with the results of the detection, the circuits are automatically locked to the input signal.

(1) INT/EXT detection

Retriggerable monostable multivibrator ICH10 is triggered by the H pulse, and if the Q output is low, this is detected by the circuit as no input, the INT mode is established, and VCO X100/101 generates a fixed frequency. ICK11 oscillates and the TRI/BB LED display starts winking.

(2) Sync signal type detection

First, the length of the V sync period is used to differentiate between the S sync signal/the tri-level sync signal (5H) and N sync signal (4H). Next, the S sync signal and tri-level sync signal are differentiated by the difference in the pulse width of the H sync pulse. The 3 types of sync signal are differentiated by the gate of both signals .

The V sync pulse is latched by the 50usec (1.7H) pulse of pin 9 monostable multivibrator ICH10, and the length of the V period is detected. When the input signal conforms to the preceding format S or to the new format, pin 9 of ICF12 is set high. Only with a preceding format S signal is a high-level signal provided at pin 5 of ICH7 by latching the V sync signal with the enable pulse for the new format at ICH7. When an AND gate between pin 6 of ICH7 and pin 9 of ICF12 is established, a low-level signal is obtained only with the new format.

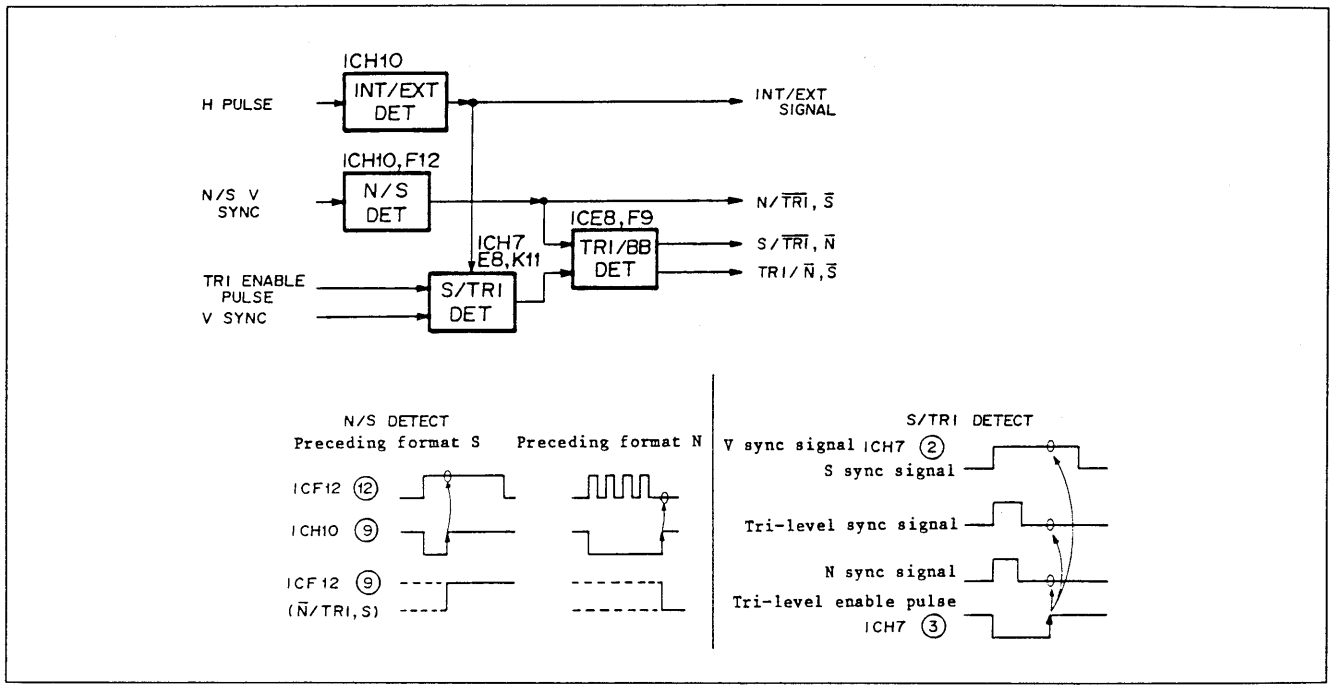

Fig. 4-10 INT/EXT Detector, Sync Signal Type Detector

(3) Field frequency detector

The field frequency of the sync signal is detected according to whether the 60Hz or 59.94Hz VCO is locked to the input signal. When the VCO is locked, the COUNT H and REF H pulses input to phase comparator ICC8 stand in the phase relationship shown in Fig. 4-11, and when the COUNT H pulse is latched by the REF H pulse using ICH7, pin 8 of ICH7 is set low and the D108 green LED lights. Conversely, when the VCO is not locked, pin 8 of ICH7 is set high or it is repeatedly set high and low periodically. The ICH7 output is integrated, the signal passing through gate ICH3 and E10 is set high, timer ICK11 is made active, and oscillation commences.

The frequency of the ICK11 output is divided by 4 by flip-flop ICH12, and in intervals of about 2 seconds the VCO X100/101 power supply is selected by the VCO selector switch composed of Q112, 113, 114 and 115. The ICH12 output is sent to the display circuit. For instance, when the 59.94Hz VCO is not installed when the 59.94Hz signal is input, the VCO will not be locked and the "OFF LINE" LED display will start winking.

In the INT mode, ICH12 is set by INT FV switch S8 and a field frequency of 60Hz or 59.94Hz is selected.

4-2-8. V Timing Signal Generator

The V counter consisting of ICA15 and E13 is activated by the 2fH clock signal which is produced by dividing down the VCO output by 1024, and the V timing signal is generated by 8K-byte EPROM ICD16. The first 4k bytes are assigned for the N sync signal and the last 4k bytes for the S sync signal. They are selected by the most significant bit of the ROM. A special bit is used for the tri-level sync signal.

The frame reset pulse separated from the input sync signal and the frame reset pulse of pin 11 of ROM ICD16 are AND-ed by ICF9, the counter is reset and frame synchronization is established.

The ROM outputs include 2 bits each for the V sync signal of the black burst signals (preceding formats N and S), 2 bits for the V sync signal of the tri-level sync signal, 1 bit for input video blanking and the phase comparison enable pulse for the S sync signal, and also 1 bit for the 525-line format sync frame reset pulse in CH-2. These outputs are synchronized by ICD14 to the 2fH clock signal.

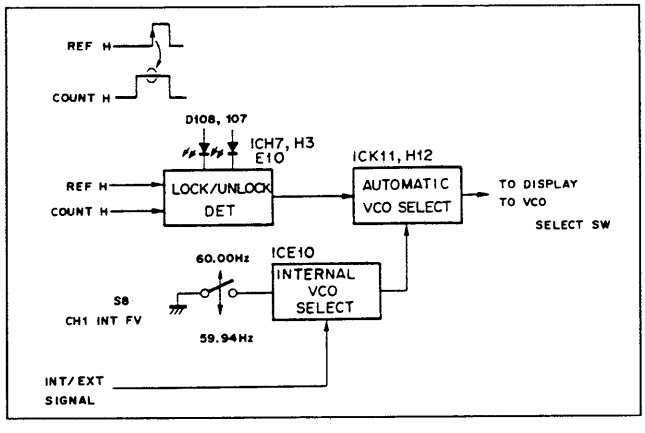

Fig. 4-11 Field Frequency Detector

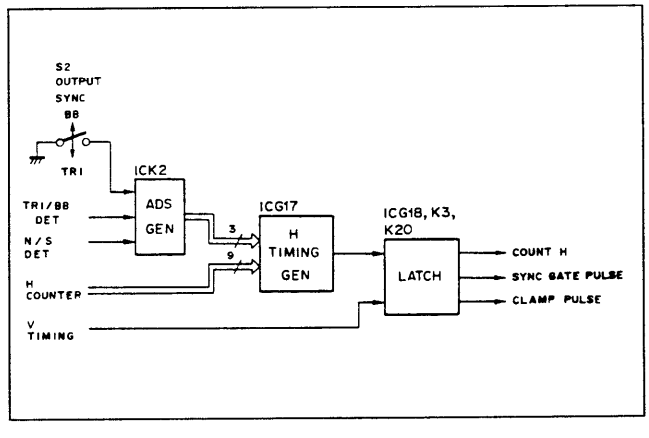

Fig. 4-12 V Timing Signal Generator

4-2-9. Sync Generator

The counter ICF13 and F14 outputs and the V timing signals synchronized by ICK13 are supplied to the PROM address and the sync signals are generated. ICG16 is the tri-level sync signal PROM. ICK16, K18, D18 and A17 configure the N/S sync signal PROMs which generate the blackburst signal. Due to the restrictions imposed on its access time, the N/S blackburst PROMs are characterized by 4-phase drive, as shown in Fig. 4-13. The PROM output is made the 69.12MHz sample data by data selector ICA20 and D21, and it is supplied to high-speed D/A converter ICA21. The output of this converter is supplied to low-pass filter FL102 where the higher harmonics are filtered out so that the N/S blackburst signal is produced.

The tri-level sync signal is stored in PROM ICG16 as 2-bit data. The ICG16 output is latched by high-speed CMOS flip-flop ICG18, D/A converted directly by the resistor matrix and made to serve as the tri-level sync signal. Filter FL103 serves to adjust the rise time of the tri-level sync signal. A slight correction is additionally made to the matrix resistor network by R246 so that the positive/negative bipolar levels are made the same.

4-2-10. H Timing Signal Generator

The H timing signal is read out from PROM ICG17. The address inputs of this PROM are 3-bit address which indicates the combination of the input/output sync signals in place of the V timing signal. This 3-bit address is generated by PROM ICK2. The output COUNT H pulse adjusts the input/output sync phase in 17.3 MHz clock signal units.

The SYNC GATE pulse is a pulse which selects the sync signal in the video signal, a gate with the V timing signal is established and this is used as the switch signal of the video output circuit. In addition, the clamp pulse of the output sync signal is created as the H and V compositive pulse.

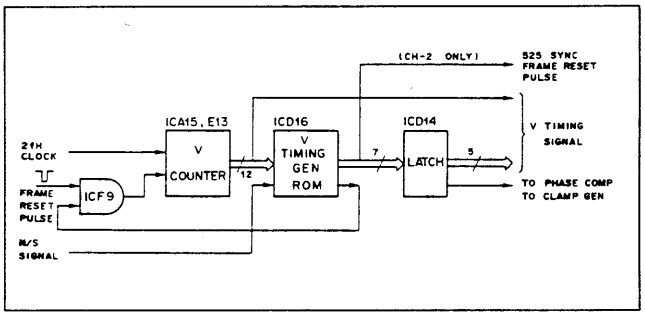

Fig. 4-15 H Timing Generator

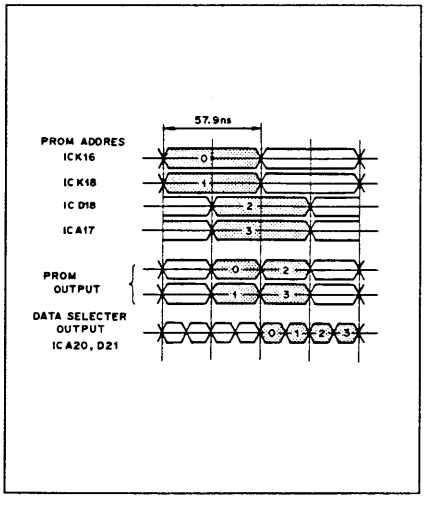

Fig. 4-13 N/S Blackburst PROM 4-phase Drive

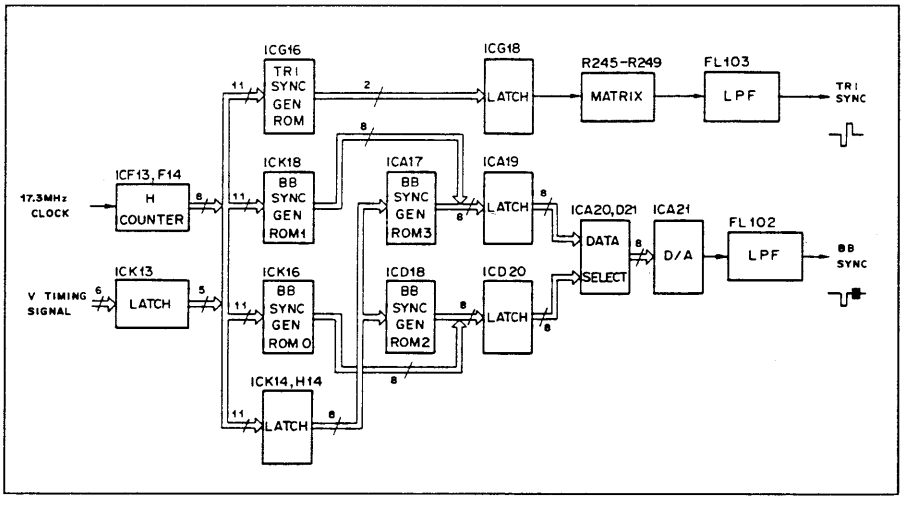

Fig. 4-14 Sync Generator

4-2-11. Sync Phase Adjustment Circuit

The phase of the sync signal output is adjusted in 17.3MHz clock signal units by the H timing ROM but the sync phase adjustment circuit serves to adjust the phase finely in analog terms.

The address indicating the input/output sync signal combination is supplied to analog multiplexer ICF10 and a DC voltage corresponding to the adjustment resistance composed of R219 and other resistors is output. This DC voltage is supplied to ECL monostable multivibrator ICF8 to control the pulse width of the output pulse. In addition, monostable multivibrator ICF8 is triggered by the COUNT H pulse from the ROM, and outputs a pulse with a width of approximately 0 .9usec. The output sync phase is adjusted by this pulse width control. RV110 or RV111 adjusts the phase difference between the input and output when the tri-level sync signal or S sync signal functions as the input and output, respectively. In the case of any other combination, it is adjusted by fixed resistors (including open). The output in which the pulse width has been controlled is converted to the TTL level by ICD4, the signal is then supplied to the phase comparator and the PLL loop is created.

4-3. VIDEO SIGNAL CIRCUIT

Channels 1 (CH-1) and 2 (CH-2) have identical circuitry and so the description is confined here to the CH-1 circuitry.

4-3-1. Sync Output Amplifier

The tri-level and N/S sync signals provided by the PROM are supplied to the switching and pedestal clamp amplifier circuit composed of switching amplifier ICK26, Q600 and FL600 and pulse gate amplifier ICK27. This circuit serves simultaneously to select the output by means of output sync switch S2 and clamp the pedestal. The clamp pulse is created from the H and V timing signal PROM.

The clamped sync signal is supplied to via relay RY100 to the G/Y, B/PB and R/PR video output amplifier, and it is output as the REF SYNC signal from the output buffer amplifier composed of ICK29, Q601 and ICK31.

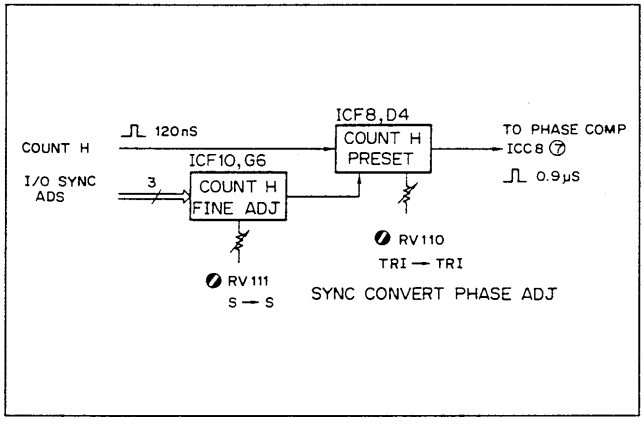

Fig. 4-16 Sync Phase Adjustment Circuit

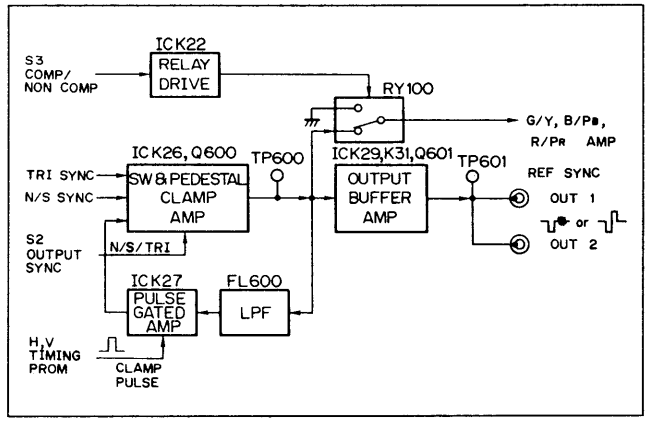

Fig. 4-17 Sync Output Amplifier

4-3-2. Video Input/Output Amplifier

This description applies only to G/Y.

The input video signal enters L500 where its input return loss is compensated for, and it is supplied to the FET buffer directly for CH-1 and via relay RY700 for CH-2. The CH-2 relay is for supplying the CH-1 video signal to the CH-2 output amplifier in the "INPUT 1→2" mode. The pedestal is then clamped by the circuit consisting of ICB27, Q502, FL500 and pulse gate amplifier ICD27. The clamp pulse used here is generated from the input sync signal. FL500 is a low-pass filter designed to sufficiently attenuate the burst level of the input signal, and it has a cut-off frequency of 2MHz.

The clamped video signal is supplied to the output switcher amplifier consisting of ICA29, Q503 and ICC31 where the sync signal is replaced.

Transistor Q504 in CH-1 is a buffer for taking out the VIDEO SYNC signal. Q505 functions as the video output buffer in the "INPUT 1→2" mode.

4-3-3. 525-Line Format Sync Output Circuit (CH-2 only)

The signal produced by counting down the H pulse from the V counter to 1/15 by means of counter ICG23 and the signal produced by counting down the 525 sync generator ICG20 output to 1/7 by means of ICE24 are both supplied to ICA23 where the phases of the two signals are compared, and a 525-line format sync signal locked to 1125-line format is obtained.

Here it is also necessary to select VCO X1 or X2 in accordance with the difference in the 60/59.94Hz field frequency. The VCO power supply is switched by Q1, 2, 3 and 4, and the VCO output is selected by ICE23.

The 525-line format SYNC and burst signals are added with resistors using open-collector ICG22, and they are output via buffer amplifier ICJ20, the low-pas s filter which has a cut-off frequency of 4MHz and which consists of L1, L2, L3, C11 and C15, and via output buffer ICJ23.

The 525-line format SYNC signal phase is determined with respect to the 1125-line format sync signal by means of the frame reset signal which is output from PROM ICQ15 for generating the V timing signal.

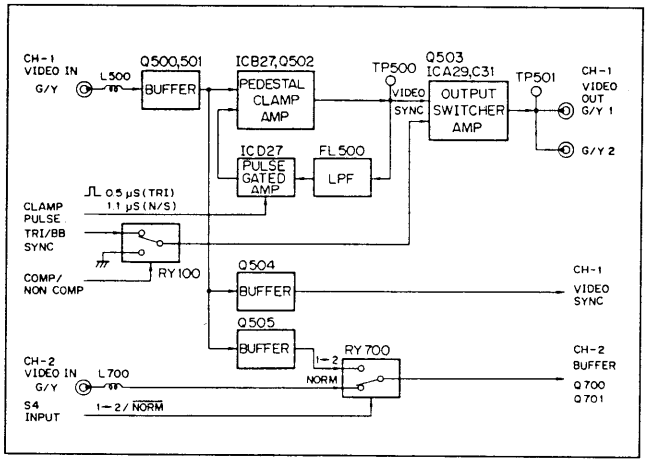

Fig. 4-18 Video Input/Output Amplifier

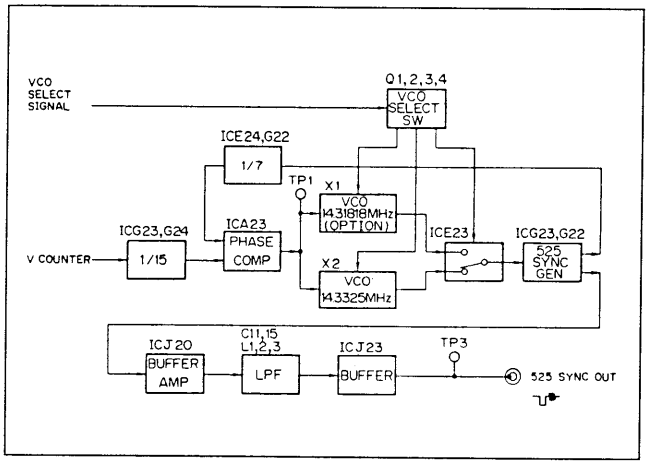

Fig. 4-19 525-Line Format Sync Output Circuit

SECTION 5
GENERAL INFORMATION FOR ALIGNMENT

5-1. INDEX OF ADJUSTMENT COMPONENTS

SG-138 Board — **Section**

CV500, CV700 8-6
CV510, CV710 8-6
CV520, CV720 8-6

RV100, RV300 8-2
RV101, RV301 8-2
RV110, RV310 8-4
RV111, RV311 8-4
RV120, RV320 8-1
RV200, RV400 8-3
RV210, RV410 8-3
RV501, RV701 8-5
RV502, RV702 8-5
RV511, RV711 8-5
RV512, RV712 8-5
RV521, RV721 8-5
RV522, RV722 8-5
RV600, RV800 8-5

PW-91A Board

RV71 7-1-3
RV72 7-1-2
RV91 7-1-3
RV92 7-1-2
RV111 7-1-3
RV131 7-1-3
RV132 7-1-2
RV151 7-1-2

CT-29 Board

RV201 7-2
RV202 7-1-1

5-2. ALIGNMENT SEQUENCE

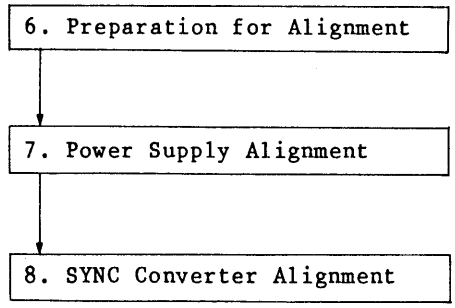

5-3. ADJUSTMENTS AFTER REPLACING BOARDS

It is not necessary to make adjustments after replacing the printed board.

SECTION 6
PREPARATION FOR ALIGNMENT

6-1. TEST EQUIPMENT

(1) Oscilloscope and probe adapter
Oscilloscope:
Band Width: 200MHz
Tektronix type 475 or equivalent
Probe adapter:
Probe tip for grounding
Tektronix; part number 013-0085-00

(2) Digital DC voltmeter
Effective digits: more than 4 1/2 digits
Accuracy: less than 0.02%±1 count

(3) DC Current Meter
10A range
Used for Section 7. Power Supply Alignment.

(4) Spectrum analyzer (Note 1)
HP corp., type 141T (used in combination with 8552B and 8553B) or equivalent

(5) Tracking generator (Note 1)
HP corp., type 8444A or equivalent

(6) 25MHz sine-wave oscillator (Note 1)

Note 1: When a spectrum analyzer and a tracking generator are not used in section 8-6, use a 25MHz sine-wave oscillator or an HDVS video signal containing highfrequency components.

6-2. INITIAL SETTING OF SWITCHES

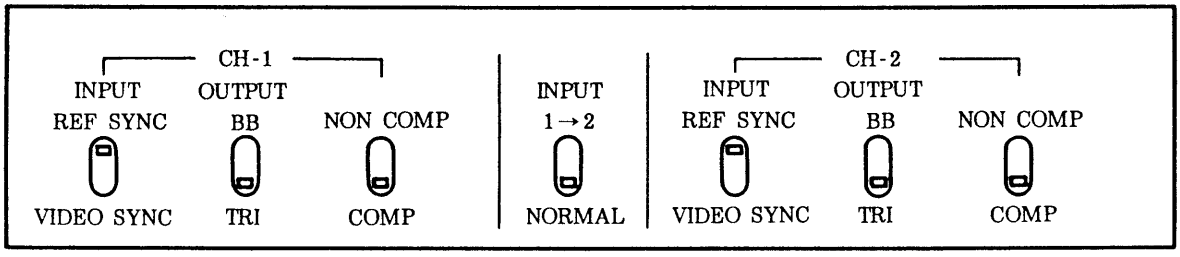

INPUT switches (both CH-1 and CH-2): REF SYNC
OUTPUT switches (both CH-1 and CH-2): TRI
NON COMP/COMP switches (both CH-1 and CH-2): COMP
INPUT 1→2/NORMAL switch: NORMAL

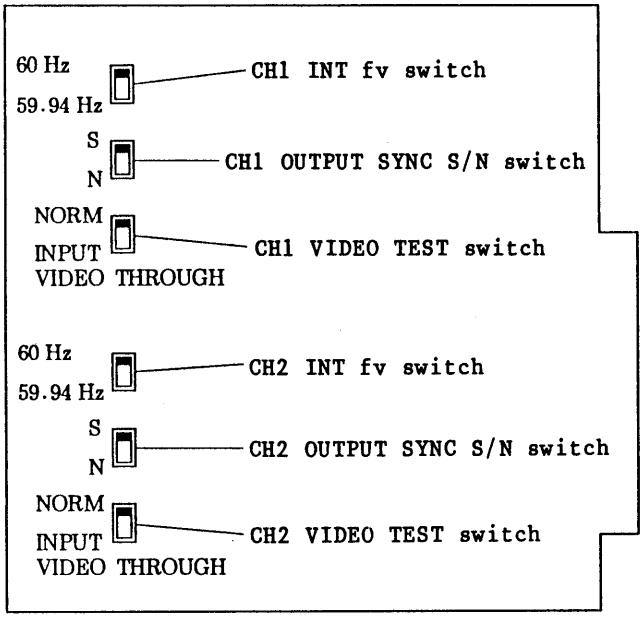

INT fv switches (both CH-1 and CH-2): 60Hz
OUTPUT SYNC switches (both CH-1 and CH-2): S
VIDEO TEST switches (both CH-1 and CH-2): NORM

SECTION 7
POWER SUPPLY ALIGNMENT

CAUTION

Do not attempt any adjustment to the power supply if there is no need for adjustment. If the output voltage of the regulated power supplies is changed, the functions of the various circuits are affected, in result, the performance of the unit becomes inferior or the whole adjustment is required.

7-1. POWER SUPPLY ADJUSTMENT WITHOUT LOAD

CAUTION

Remove the following circuit boards from the MB-201 board before performing each power supply adjustment.

1)SG-138 Board(Remove the board from the MB-201 board.)

2)DP-88 Board(Remove the CN2 connector on the MB-201 board.)

7-1-1. Switching Pulse Duty Adjustment without Load

Equipment; Digital DC Voltmeter

Adjustment

CT-29 Board

IC202 pin 1 = +5.00±0.05 Vdc

⊘RV202

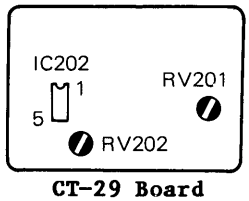

CT-29 Board
- solder side -

7-1-2. Voltage Adjustment without Load

Equipment; Digital DC Voltmeter

Caution

Insert the probe of the DC voltmeter into the terminal pin of the CN4 or CN5 connector and ground the GND tab.

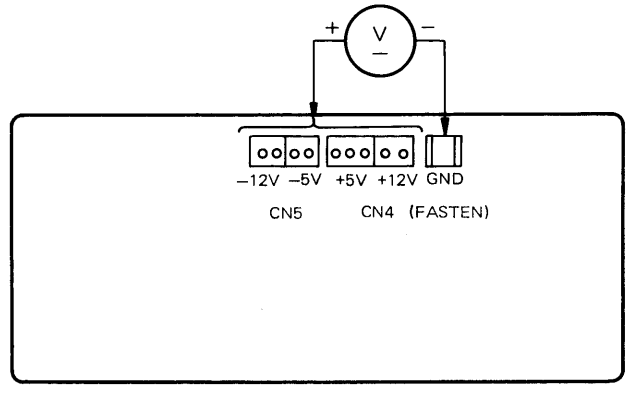

MB-201 Board - solder side -

Step 1. +12 V Adjustment

MB-201 Board: CN4 pin 1 or 2 = +12.0±0.1 Vdc

PW-91A Board: ⊘RV92

Step 2. +5 V Adjustment

MB-201 Board: CN4 pin 3,4 or 5 = +5.00±0.05 Vdc

PW-91A Board: ⊘RV72

Step 3. -5 V Adjustment

MB-201 Board: CN5 pin 1 or 2 = -5.00±0.05 Vdc

PW-91A Board: ⊘RV151

Step 4. -12 V Adjustment

MB-201 Board: CN5 pin 3 or 4 = -12.0±0.1 Vdc

PW-91A Board: ⊘RV132

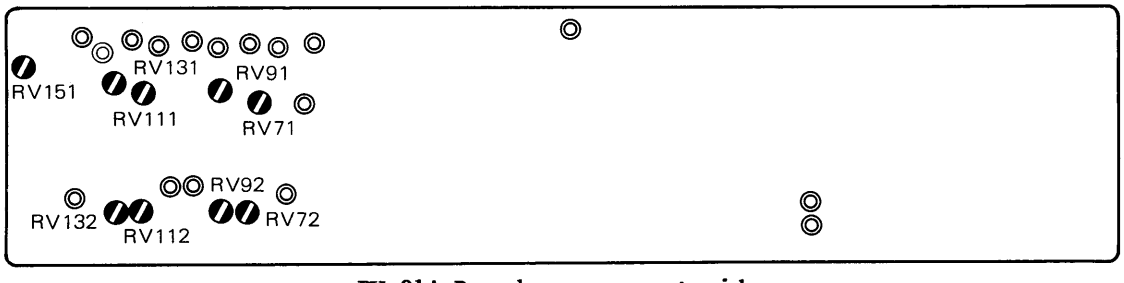

PW-91A Board - component side -

7-1-3. Short Current Adjustment without Load

Equipment; DC Current Meter

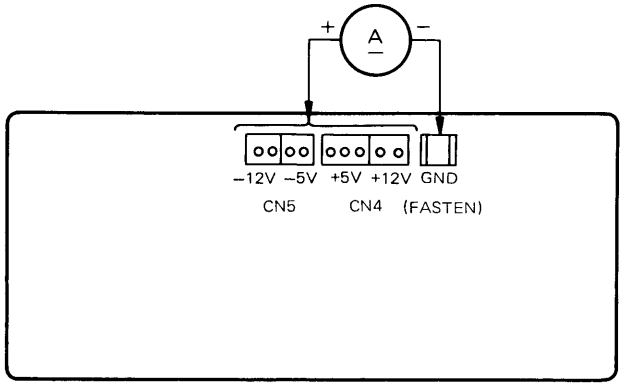

MB-201 Board - solder side -

Step 1. +12 V Adjustment

MB-201 Board: CN4 pin 1 or 2 = 1.20±0.1A

PW-91A Board: ⊘RV91

Step 2. +5 V Adjustment

MB-201 Board: CN4 pin 3,4 or 5 = 2.0±0.2A

PW-91A Board: ⊘RV71

Step 3. -5 V Adjustment

MB-201 Board: CN5 pin 1 or 2 = 0.80±0.08A

PW-91A Board: ⊘RV111

Step. 4 -12 V Adjustment

MB-201 Board: CN5 pin 3 or 4 = 0.60±0.06A

PW-91A Board: ⊘RV131

CAUTION

Connect the following circuit boards to the MB-201 board after performing the above power supply adjustment.

7-2. REGULATOR OUTPUT VOLTAGE ADJUSTMENT WITH LOAD

Equipment; Digital DC Voltmeter

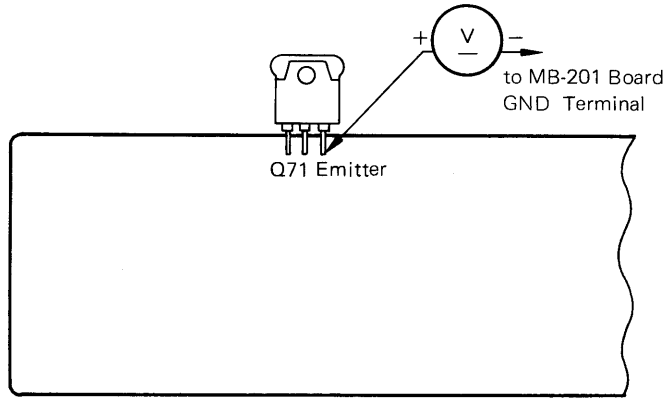

PW-91A Board - component side -

Adjustment

PW-91A Board: Q71 emitter = +6.00±0.05 Vdc

CT-29 Board: ⊘RV201

SECTION 8
SYNC CONVERTER ALIGNMENT

SG-138 BOARD (component side)

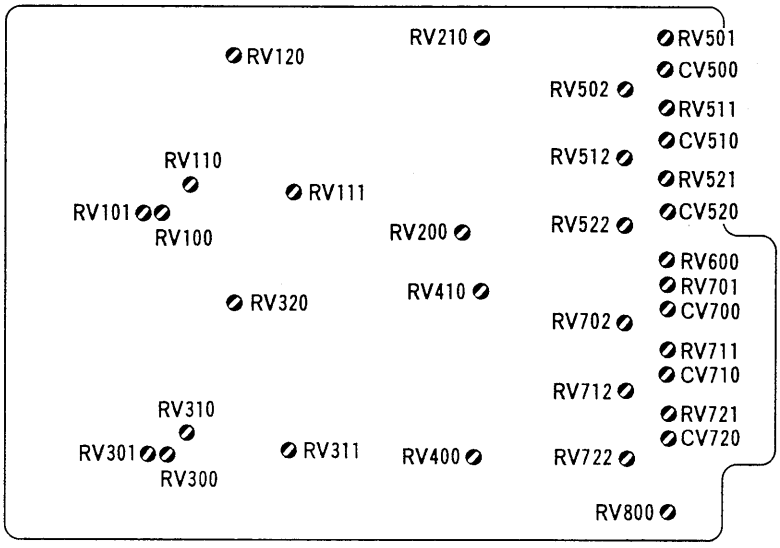

Note: Unless otherwise specified, adjustments are for the CH-1 circuit. Parentheses show the adjustments for the CH-2 circuit.

8-1. ADJUSTING THE INTERNAL OSCILLATING FREQUENCY

Switch settings: See section 6-2.
Instrument: Digital voltmeter

CH-1: TP107/SG-138: +2.00±0.05V RV120/SG-138
CH-2: TP307/SG-138: +2.00±0.05

8-2. BURST PHASE ADJUSTMENT

Switch settings: See section 6-2 and text.
Instrument: Oscilloscope

1. Connection of equipment
   Connect SYNC/VIDEO OUT 1/CH-2 (CH-1) to SYNC/VIDEO IN/CH-1 (CH-2). That is, connect the equipment as shown by the solid line for making the CH-1 adjustment, and connect it as shown by the broken line for making the CH-2 adjustment.

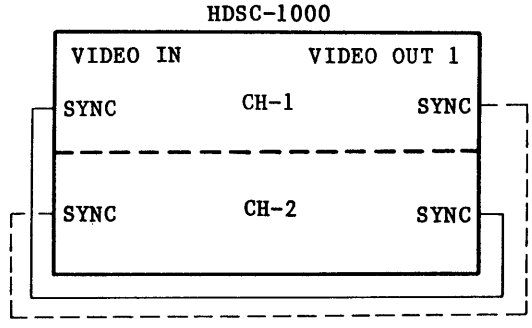

2. Set the CH-2 (CH-1) OUTPUT switch on the control panel to BB.

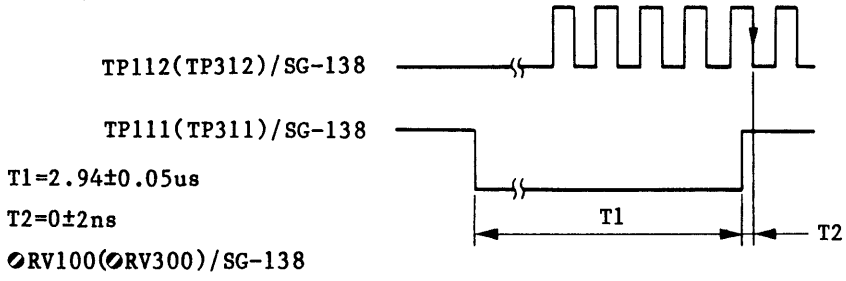

3. Set the CH-1 (CH-2) OUTPUT SYNC S/N switch on the SG-138 board to N.

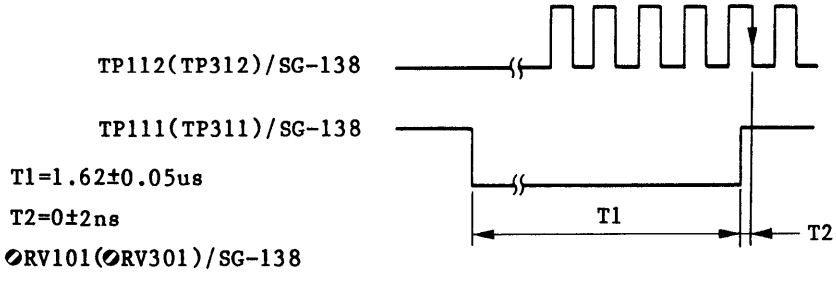

4. Return the setting of the CH-2 (CH-1) OUTPUT switch on the control panel to TRI and that of the CH-1 (CH-2) OUTPUT SYNC S/N switch on the SG-138 board to S.

8-3. SYNC OUTPUT LEVEL ADJUSTMENT

Switch settings: See section 6-2 and text.
Instrument: Oscilloscope

1. Connection of equipment
   Connect SYNC/VIDEO OUT 1/CH-2 (CH-1) to SYNC/VIDEO IN/CH-1 (CH-2), and connect SYNC/VIDEO OUT 1/CH-1 (CH-2) to an oscilloscope. That is, connect the equipments as shown by the solid lines for making the CH-1 adjustment, and connect them as shown by the broken lines for making the CH-2 adjustment.

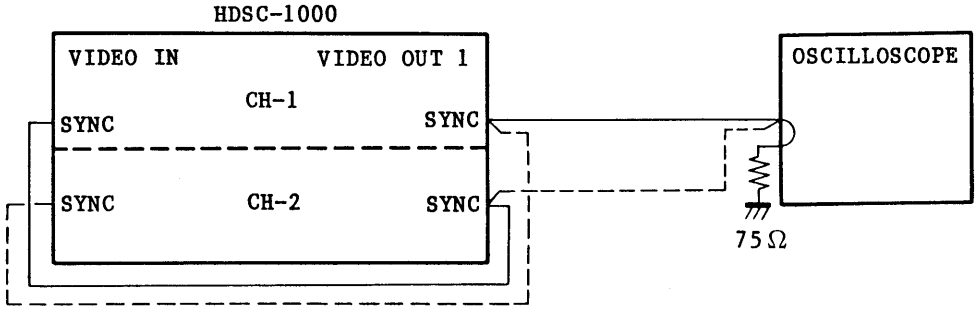

2. Set the CH-1 (CH-2) OUTPUT switch on the control panel to BB.
   CH-1 (CH-2) VIDEO OUT 1 SYNC

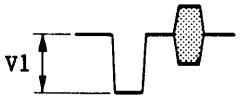

   V1=300±4mV
   ⊘RV210(⊘RV410)/SG-138

3. Set the CH-1 (CH-2) OUTPUT switch on the control panel to TRI.
   CH-1 (CH-2) VIDEO OUT 1 SYNC

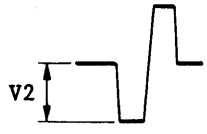

   V2=300±4mV
   ⊘RV200(⊘RV400)/SG-138

8-4. SYNC OUTPUT PHASE ADJUSTMENT

Switch settings: See section 6-2 and text.
Instrument: Oscilloscope

1. Connection of equipment
   Connect SYNC/VIDEO OUT 1/CH-2 (CH-1) to SYNC/VIDEO IN/CH-1 (CH-2), and connect SYNC/VIDEO OUT 1/CH-1 (CH-2) and SYNC/VIDEO OUT 2/CH-2 (CH-1) to an oscilloscope. That is, connect the equipments as shown by the solid lines for making the CH-1 adjustment, and connect them as shown by the broken lines for making the CH-2 adjustment. Adjust the length of the connection cables as shown in the drawing above to match the delay time.

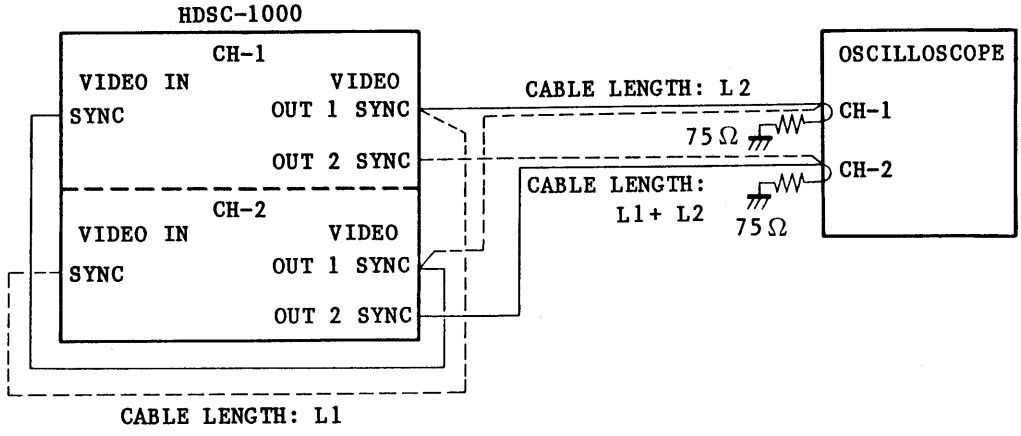

2. Check that the CH-1 and CH-2 OUTPUT switches on the control panel are set in TRI.

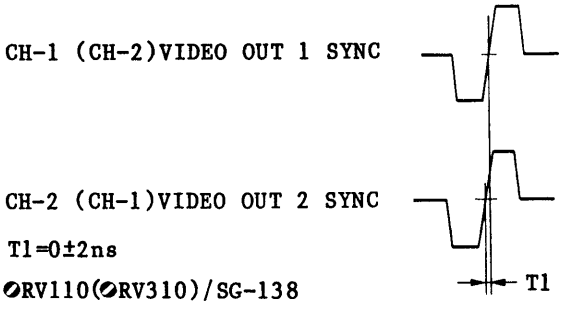

3. Set the CH-1 and CH-2 OUTPUT switches on the control panel to BB.

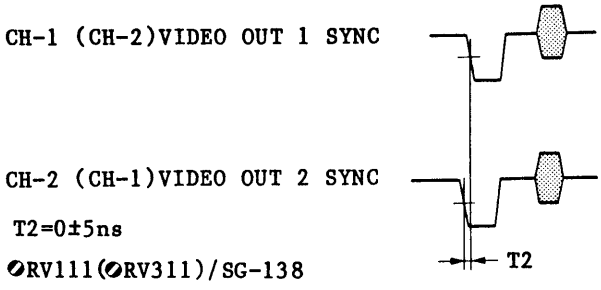

4. Return the settings of the CH-1 and CH-2 OUTPUT switches on the control panel to TRI.

8-5. VIDEO OUT LEVEL ADJUSTMENT

Switch settings: See section 6-2 and text.
Instrument: Oscilloscope

1. G/Y pedestal level adjustment

1-1. Connection of equipment

Connect SYNC/VIDEO OUT 1/CH-2 (CH-1) to G/Y/VIDEO IN/CH-1 (CH-2), and connect SYNC/VIDEO OUT 2/CH-2 (CH-1) to SYNC/VIDEO IN/CH-1 (CH-2). That is, connect the equipments as shown by the solid lines for making the CH-1 adjustment, and connect them as shown by the broken lines for making the CH-2 adjustment.

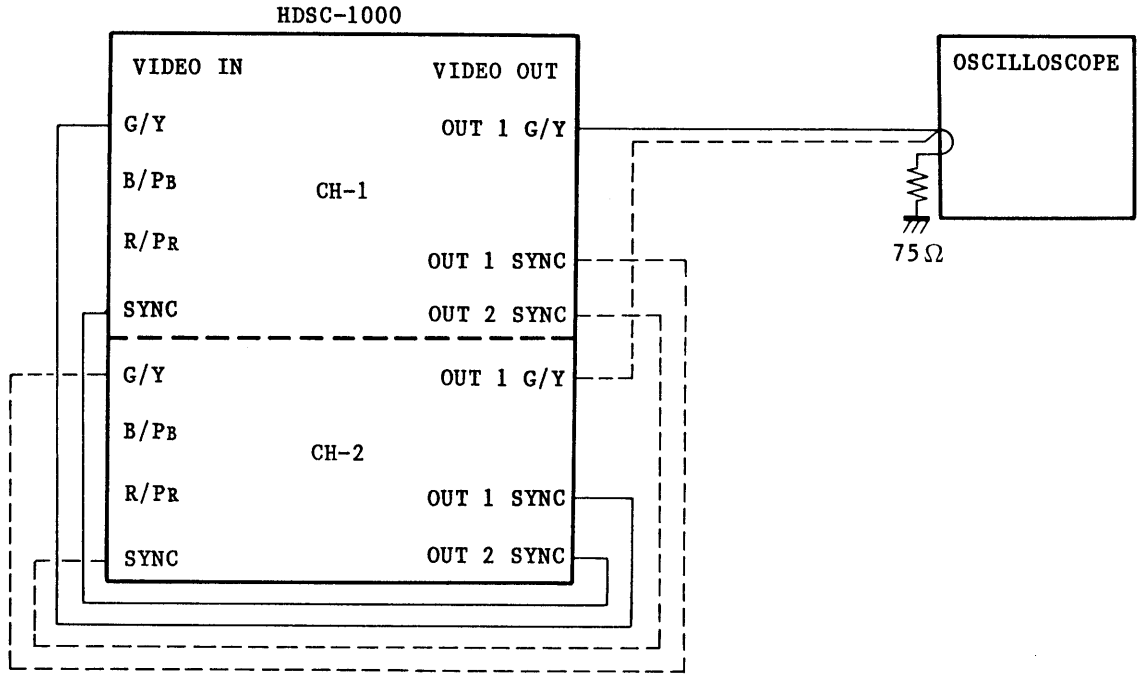

1-2. Adjustment

Adjust the SYNC pedestal level of G/Y/VIDEO OUT 1/CH-1 (CH-2) with ⊘RV600 (⊘RV800)/SG-138 so that it is the same level as that with setting the NON COMP/COMP switch on the control panel to NON COMP, then adjust the VIDEO pedestal level with ⊘RV502 (⊘RV702).

CH-1 (CH-2) VIDEO OUT 1 G/Y

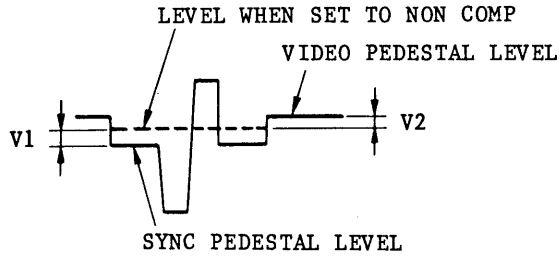

V1=0±2mV
⊘RV600(⊘RV800)/SG-138
V2=0±2mV
⊘RV502(⊘RV702)/SG-138

2. G/Y OUTPUT level adjustment

2-1. Connection of equipment

Input VIDEO signal (camera, etc.) to G/Y/VIDEO IN/CH-1 (CH-2).

2-2. Adjustment

CH-1 (CH-2)VIDEO OUT 1 G/Y

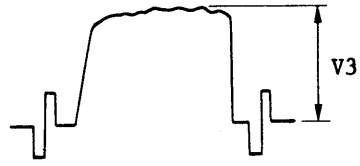

V3=Input signal±1%
⊘RV501(⊘RV701)/SG-138

3. B/P_B and R/P_R adjustment

Adjust B/P_B and R/P_R in the same way as in steps 1 and 2. It is not necessary to adjust the SYNC pedestal levels of B/P_B and R/P_R.

	VIDEO PEDESTAL LEVEL ADJUSTMENT	VIDEO OUTPUT LEVEL ADJUSTMENT
B/P_B	⊘RV512 (⊘RV712)	⊘RV511 (⊘RV711)
R/P_R	⊘RV522 (⊘RV722)	⊘RV521 (⊘RV721)

8-6. VIDEO OUT FREQUENCY RESPONSE ADJUSTMENT

Switch settings: See section 6-2 and text.
Instrument: Spectrum analyzer or oscilloscope

1. Set the CH-1 (CH-2) VIDEO TEST switch on the SG-138 board to INPUT VIDEO THROUGH, and set the CH-1 (CH-2) INPUT switch on the control panel to REF SYNC.

2. G/Y adjustment

2-1. Connection of equipment

Connect SYNC/VIDEO OUT 1/CH-2 (CH-2) to SYNC/VIDEO IN/CH-1 (CH-2). Then, connect a tracking generator to G/Y/VIDEO IN 1/CH-1 (CH-2), and a spectrum analyzer to G/Y/VIDEO OUT 1/CH-1 (CH-2). That is, connect the equipments as shown by the solid lines for making the CH-1 adjustment, and connect them as shown by the broken lines for making the CH-2 adjustment.

When the tracking generator and the spectrum analyzer cannot be used, use a 25MHz sine-wave oscillator and an oscilloscope. When the 25MHz sine-wave oscillator cannot be used, use HDVS video signal containing high frequency components and an oscilloscope.

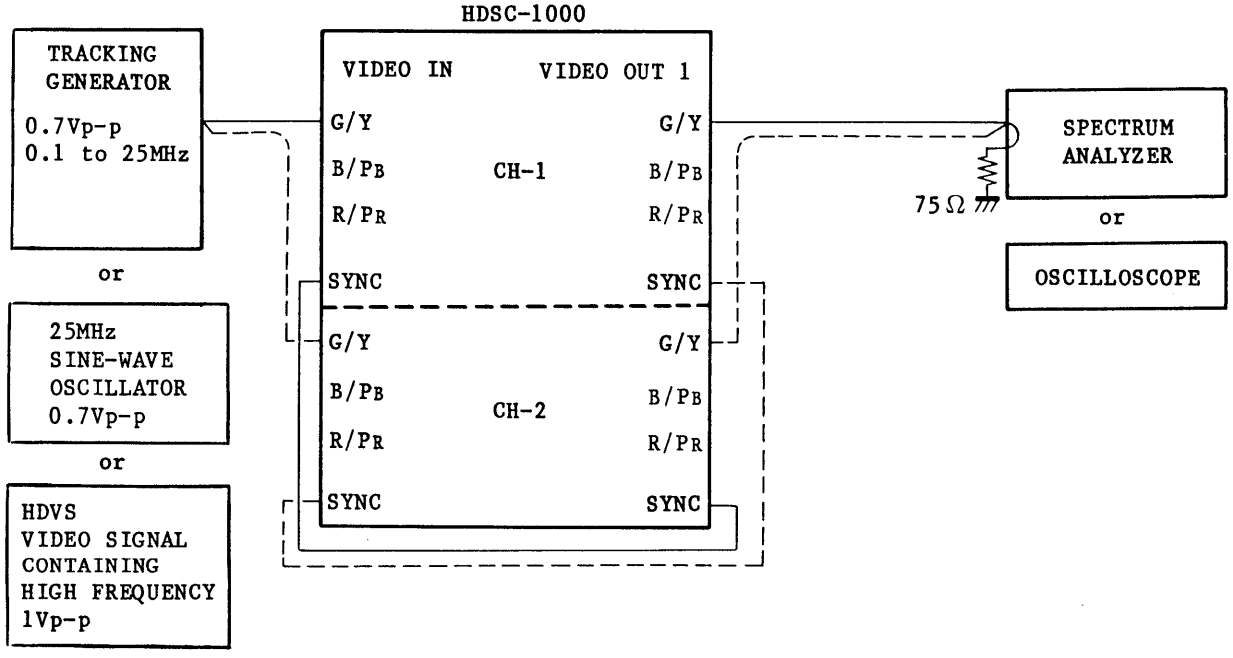

2-2. Adjustment

Make adjustments in method A when a tracking generator and a spectrum analyzer are used. Make adjustments in method B when a 25MHz sine-wave oscillator is used. Make adjustments in method C when HDVS video signal is used.

A. When a tracking generator and a spectrum analyzer are used:

CH-1 (CH-2)VIDEO OUT 1 G/Y

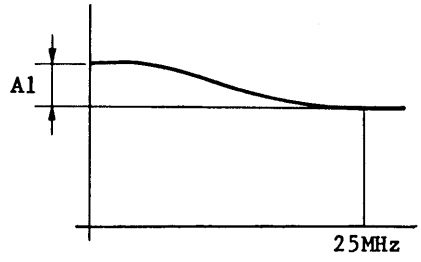

A1=0±0.2dB
⌀CV500(⌀CV700)/SG-138

B. When a 25MHz sine-wave oscillator is used:

CH-1 (CH-2)VIDEO OUT 1 G/Y

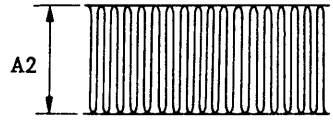

A2=Input signal±2%
⌀CV500(⌀CV700)/SG-138

C. When HDVS video signal is used:

CH-1 (CH-2)VIDEO OUT 1 G/Y

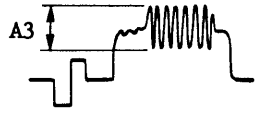

A3=Input signal±2%
⌀CV500(⌀CV700)/SG-138

3. B/P_B and R/P_R adjustment

Adjust B/P_B and R/P_R in the same way as in step 2.

B/P_B	⌀CV510(⌀CV710)/SG-138
R/P_R	⌀CV520(⌀CV720)/SG-138

4. Return the setting of the CH-1 (CH-2) VIDEO TEST switch on the SG-138 board to NORM and that of the CH-1 (CH-2) INPUT switch on the control panel to VIDEO SYNC.

SECTION A
BLOCK DIAGRAMS

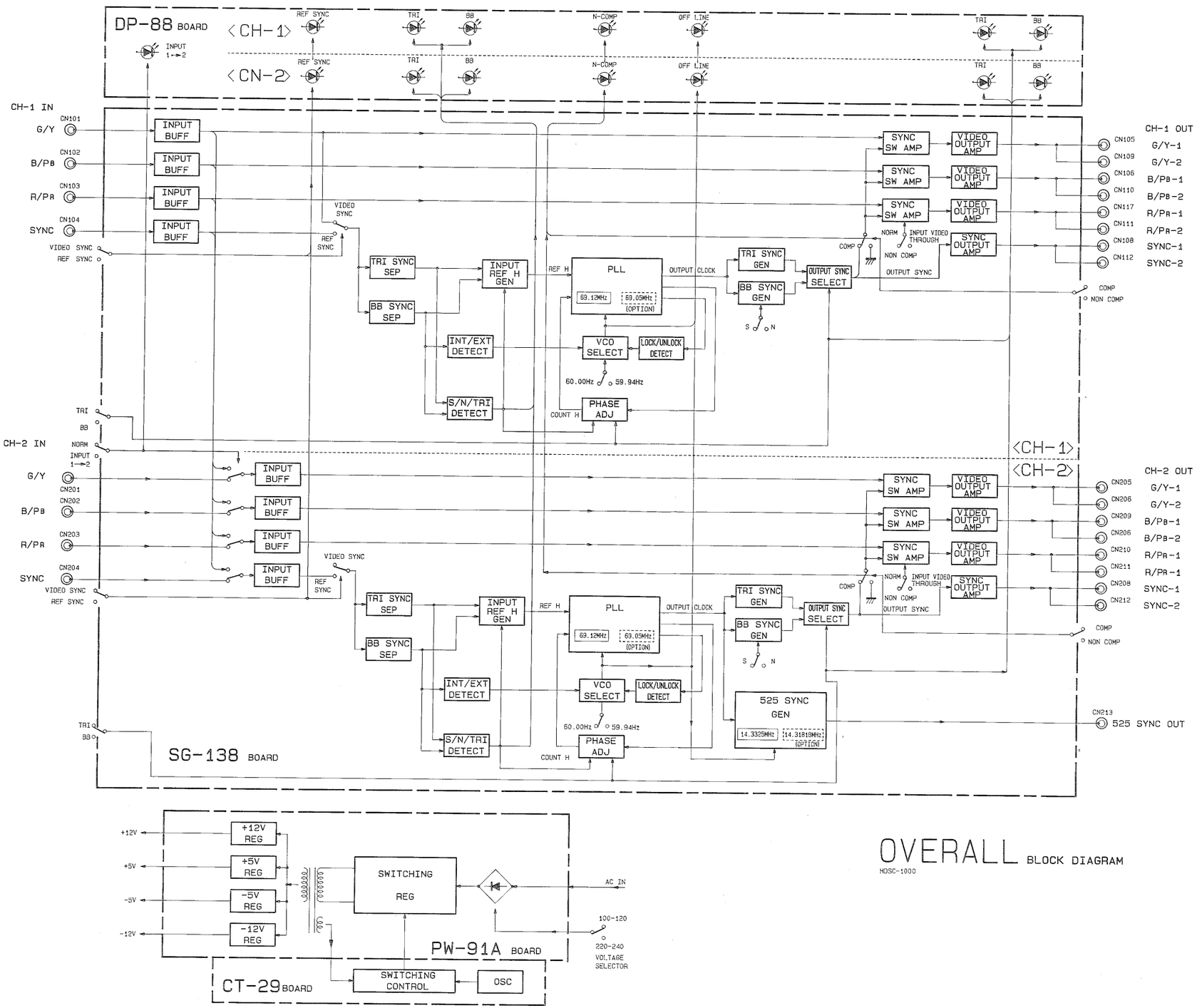

OVERALL BLOCK DIAGRAM
HDSC-1000

SG-138 (1/2) BLOCK DIAGRAM

BLOCK DIAGRAM SG-138 (1/2)

SG-138 BOARD (1/2)

SYNC Converter

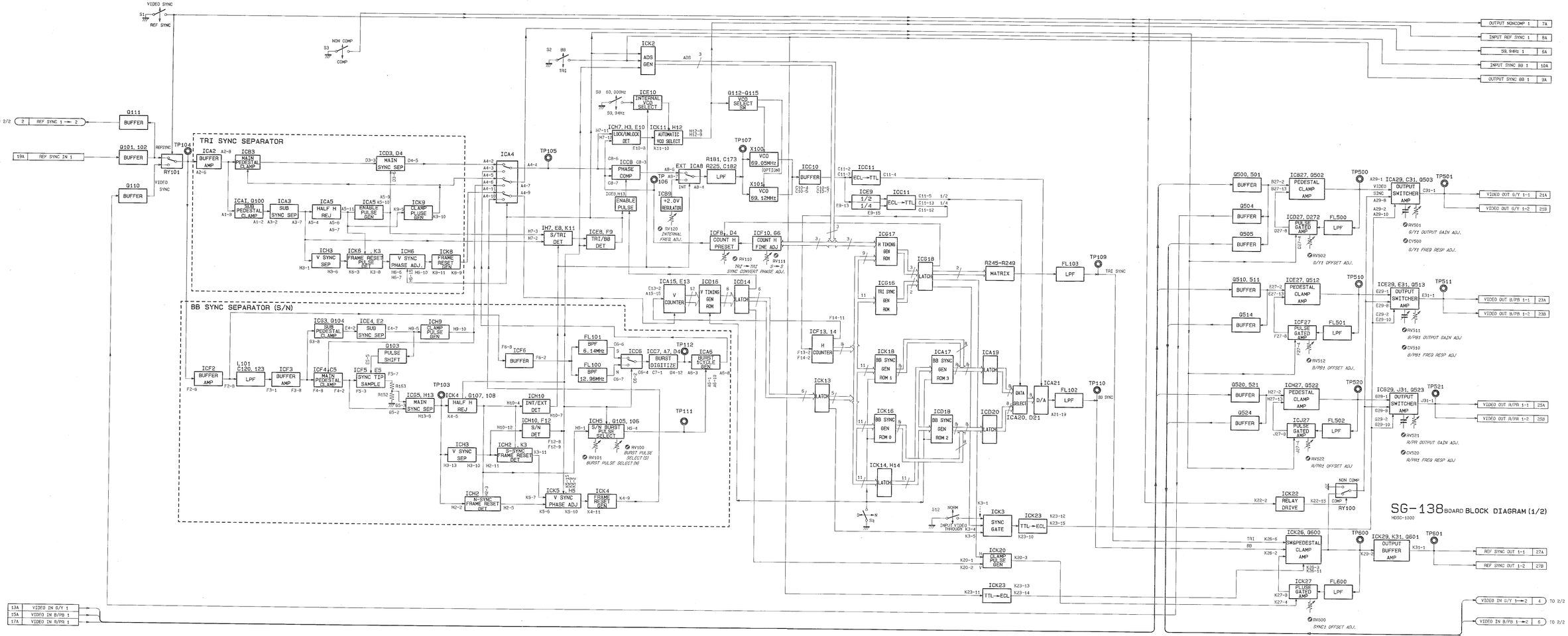

SG-138 (2/2) BLOCK DIAGRAM

BLOCK DIAGRAM SG-138 (2/2)

SG-138 BOARD (2/2)

SYNC Converter

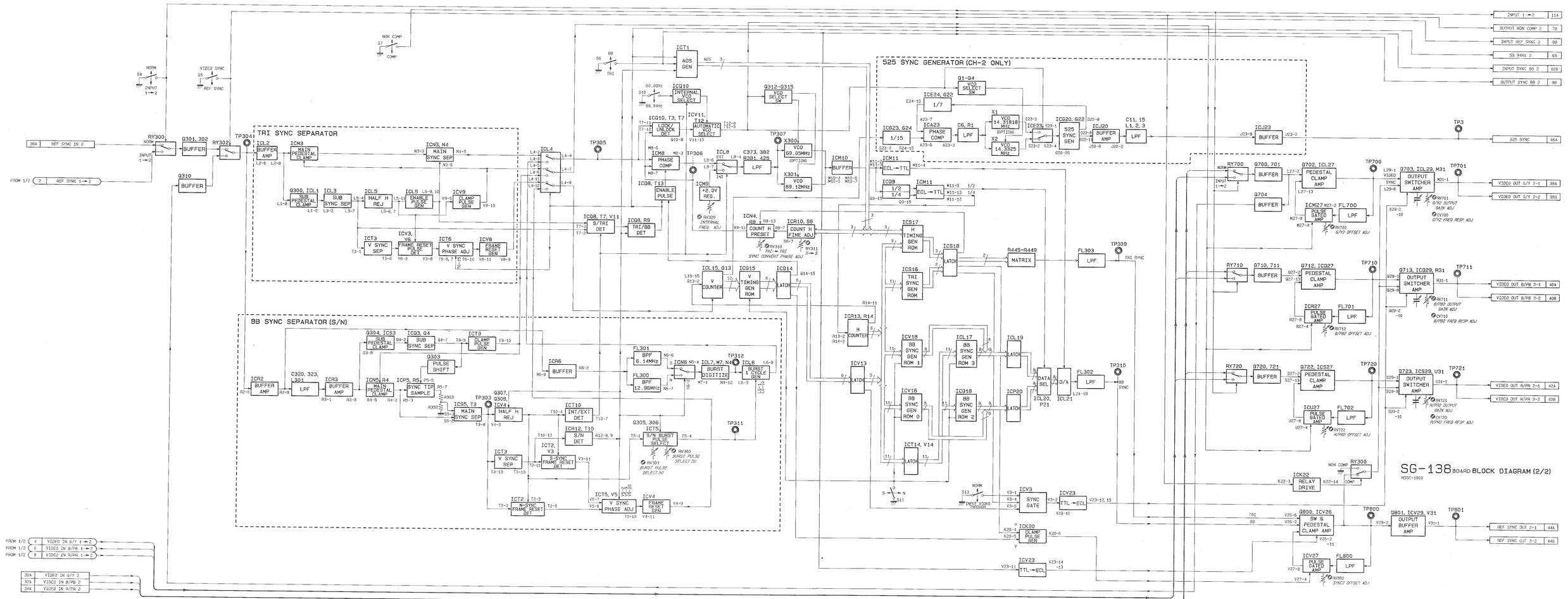

SECTION B
SCHEMATIC DIAGRAMS & BOARD LAYOUTS

SG-138 (1-624-508-11)

HDSC-1000

CV500	B30	Q1	D23	RV100	H5	TP306	N8
CV510	E30	Q2	D23	RV101	H4	TP307	L14
CV520	G30	Q3	D23	RV110	G6	TP308	N14
CV700	L30	Q4	D23	RV111	G11	TP309	T22
CV710	P30	Q12	B13	RV120	B8	TP310	P22
CV720	P30	Q13	B13	RV200	J21	TP311	M6
		Q14	B13	RV210	A22	TP312	L3
D100	A1	Q15	B14	RV300	T5	TP500	A28
D101	B1	Q100	B1	RV301	T4	TP501	B31
D103	D2	Q101	F1	RV302	M8	TP510	D28
D105	G3	Q102	F1	RV310	S6	TP511	E31
D106	G3	Q103	F4	RV311	T11	TP520	G28
D107	H8	Q104	G3	RV400	T22	TP521	H31
D108	J8	Q105	H5	RV410	L22	TP600	J28
D109	C2	Q106	H4	RV500	A30	TP601	K31
D111	B12	Q107	H4	RV501	A30	TP700	L28
D200	Q1	Q108	H5	RV502	C29	TP701	L31
D300	L1	Q110	D1	RV511	D30	TP710	P28
D301	M1	Q111	F1	RV512	F29	TP711	P31
D303	P2	Q112	C13	RV521	G30	TP720	R28
D305	R3	Q113	C13	RV522	H29	TP721	S31
D306	R3	Q114	C13	RV600	K30	TP800	T28
D307	T8	Q115	C14	RV701	L30	TP801	U31
D308	T8	Q300	M1	RV702	M29		
D309	N2	Q301	Q1	RV711	N30	X1	B23
D500	B28	Q302	Q1	RV712	Q29	X2	B24
D501	B30	Q303	Q4	RV721	R30	X100	A10
D510	B28	Q304	S3	RV722	T29	X101	A13
D511	E30	Q305	T5	RV800	V30	X300	L10
D520	G28	Q306	T4			X301	L13
D521	H30	Q307	T4	RY100	K25		
D600	K28	Q308	T5	RY101	D1		
D601	K31	Q310	N1	RY300	V24		
D700	L28	Q312	M13	RY301	R1		
D701	M30	Q313	M13	RY302	N1		
D710	P28	Q314	M13	RY700	L24		
D711	P30	Q315	M14	RY710	P24		
D720	S28	Q500	A26	RY720	R24		
D721	S30	Q501	B26				
D800	T28	Q502	B28	S1	E1		
D801	V30	Q503	C30	S2	G1		
		Q504	C25	S3	H1		
E1	A1	Q505	C26	S4	L1		
E2	B6	Q510	E26	S5	N1		
E3	A14	Q511	E26	S6	Q1		
E4	A23	Q512	E28	S7	S1		
E5	A31	Q513	F30	S8	F1		
E6	E21	Q514	F26	S9	G1		
E7	G1	Q520	G26	S10	P1		
E8	G9	Q521	H26	S11	R1		
E9	P25	Q522	G28	S12	K1		
E10	L1	Q523	H30	S13	T1		
E11	L15	Q524	H26				
E12	N24	Q600	K28	TP1	A24		
E13	L31	Q601	K30	TP2	A23		
E14	L1	Q700	M26	TP3	B23		
E15	V1	Q701	M26	TP100	F1		
E16	V7	Q702	L27	TP101	D2		
E17	V19	Q703	M30	TP102	C6		
E18	V24	Q704	M25	TP103	K12		
E19	V31	Q710	P26	TP104	C1		
		Q711	P26	TP105	C8		
FL100	E6	Q712	P27	TP106	D8		
FL101	E6	Q713	Q30	TP107	A14		
FL102	C22	Q720	R26	TP108	C14		
FL103	J20	Q721	S26	TP109	J22		
FL300	P6	Q722	R27	TP110	E22		
FL301	P6	Q723	T30	TP111	B5		
FL302	M22	Q800	T28	TP112	A3		
FL303	T20	Q801	V30	TP205	T2		
FL500	B28			TP301	P2		
FL501	E28	RB600	K24	TP302	N6		
FL502	H28	RB800	V24	TP303	V10		
FL600	K28			TP304	M1		
FL700	L28			TP305	N8		
FL701	P28						
FL702	S28						
FL800	V28						

SG-138 BOARD (1-624-508-11)

Component Side

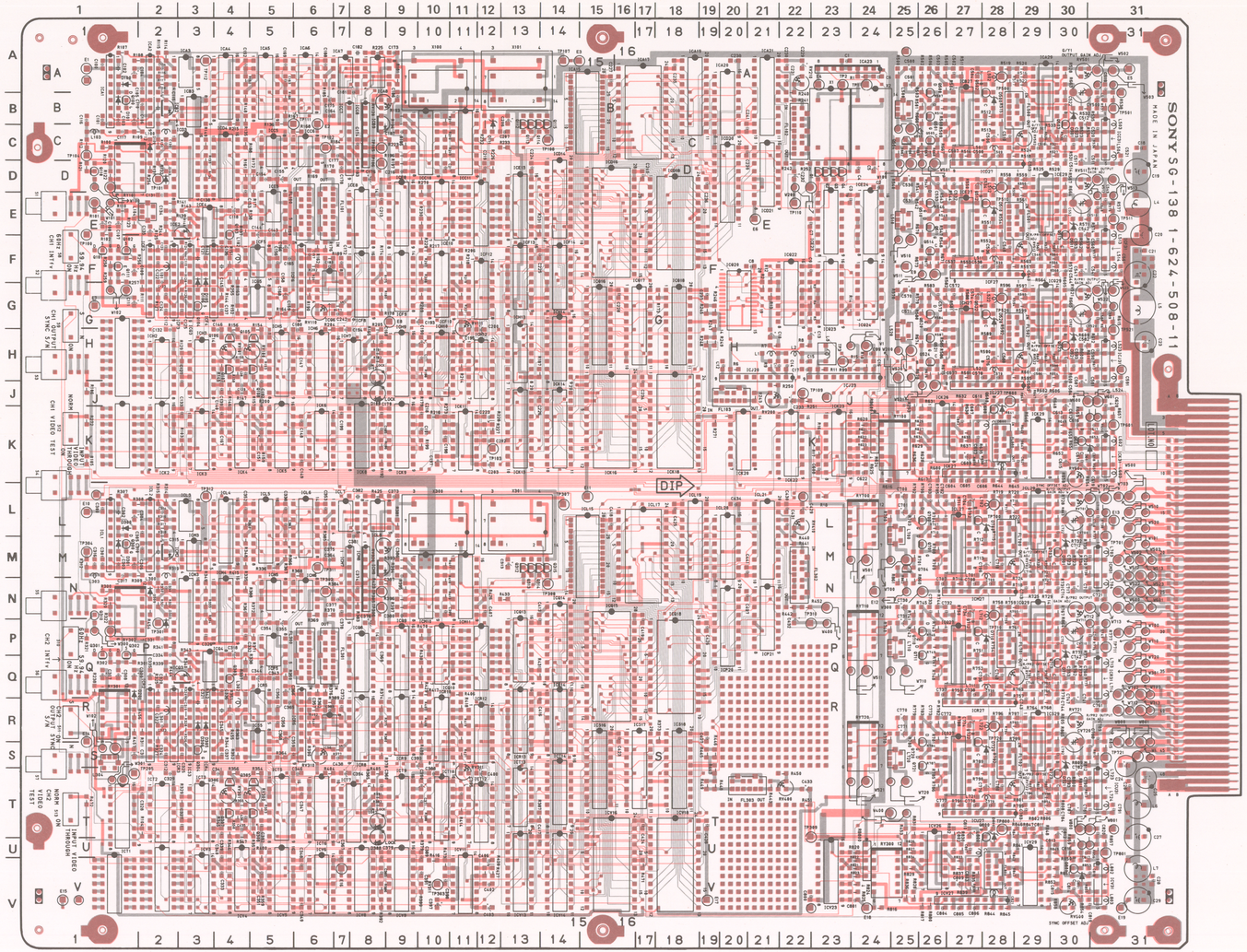

1-624-508-11 COMPONENT SIDE

1-624-508-11 SOLDER SIDE

SG-138 BOARD (1/2)

SYNC Converter

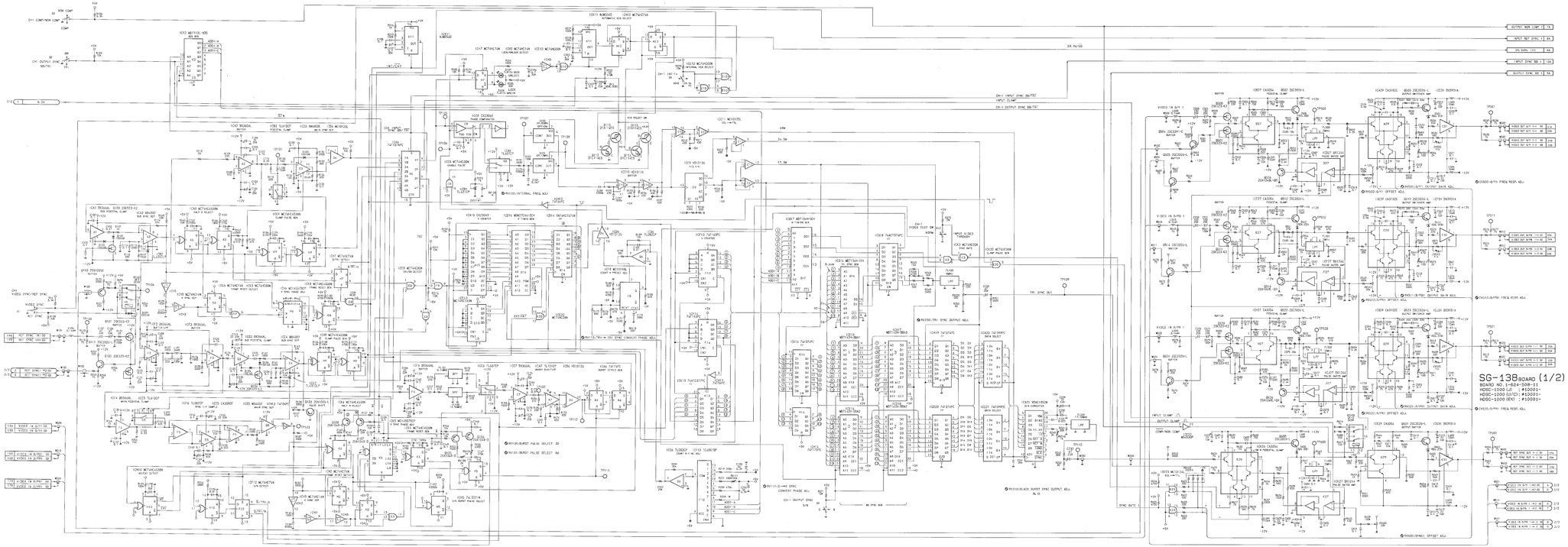

SG-138 (1/2) BOARD SG-138 (1/2) BOARD

SG-138 BOARD (1/2)
BOARD NO.1-624-508-11
HDSC-1000 L/U #10001-
HDSC-1000 U/C) #10001-
HDSC-1000 (EX) #10001-

SG-138 (2/2) BOARD

SG-138 (2/2) BOARD

SG-138 (2/2) BOARD

SG-138 (2/2) BOARD

SG-138 BOARD (2/2)

SYNC Converter

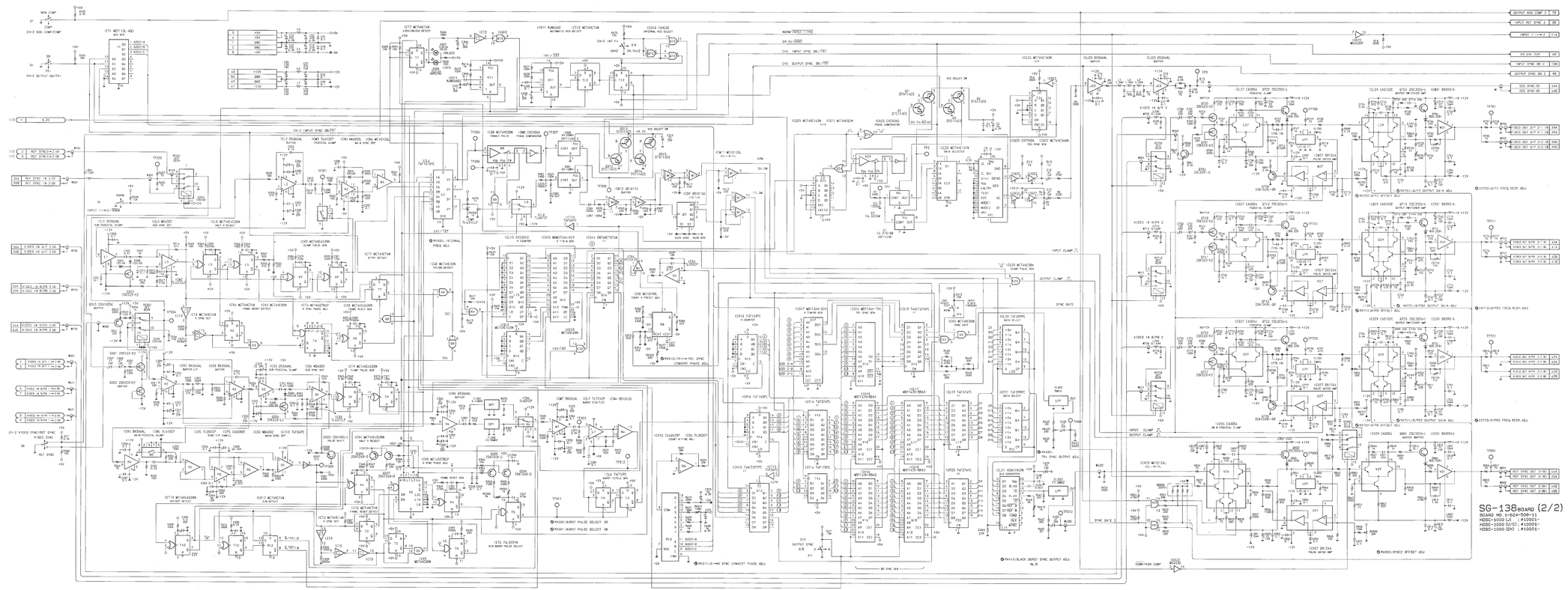

B-15

B-16

B-17

B-18

SG-138 BOARD (2/2)

BOARD NO.1-624-508-11

HDBC-1000 (J) : #10001-

HDBC-1000 (U) / #10001-

HDBC-1000 (CH) : #10001-

DP-88 BOARD (1-624-510-11)

Component Side

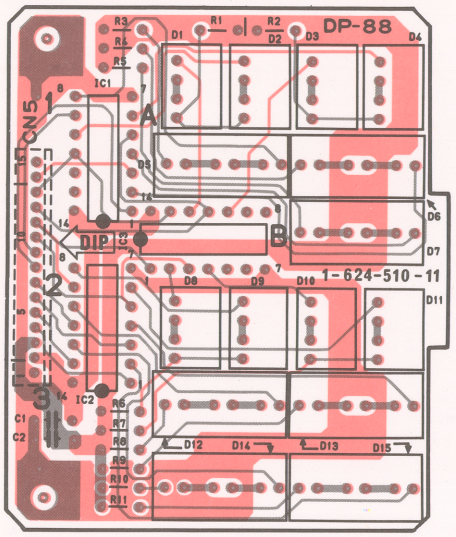

1-624-510-11 COMPONENT SIDE

1-624-510-11 SOLDER SIDE

DP-88 BOARD

Display

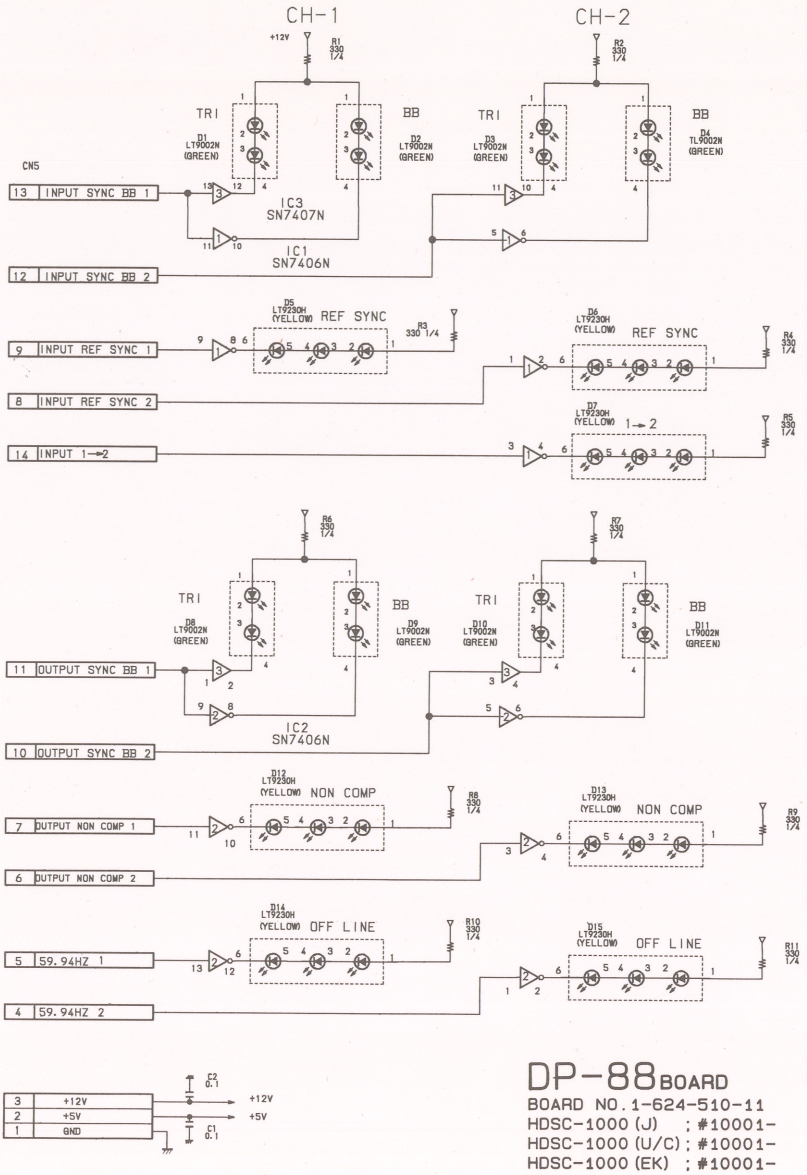

DP-88 BOARD

BOARD NO. 1-624-510-11

HDSC-1000 (J) ; #10001-

HDSC-1000 (U/C) ; #10001-

HDSC-1000 (EK) ; #10001-

POWER SUPPLY PW-91A, CT-29

PW-91A BORAD (1-605-405-14)

Component Side

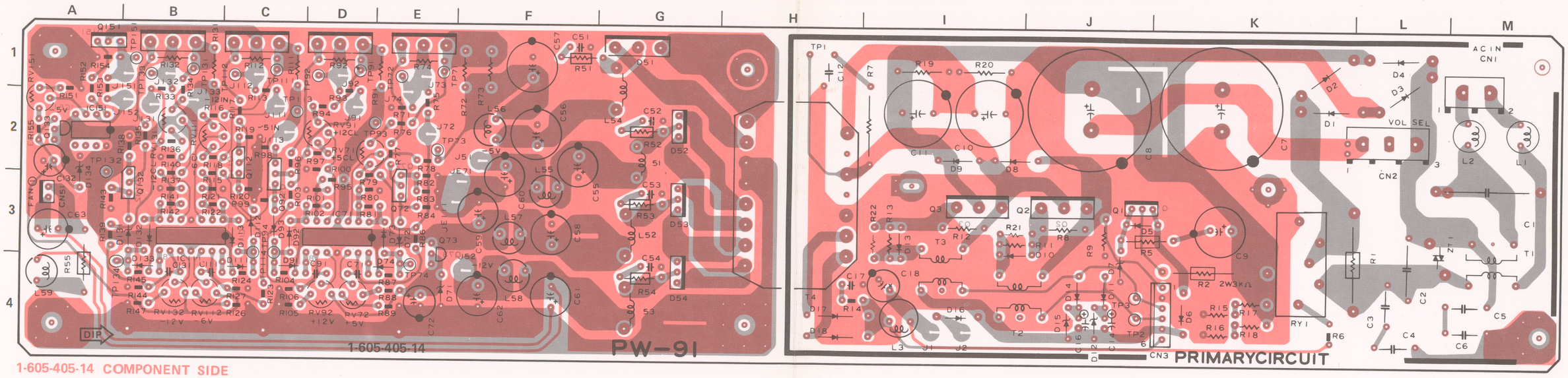

1-605-405-14 COMPONENT SIDE

1-605-405-14 SOLDER SIDE

CT-29 BORAD (1-605-406-13)

Component Side

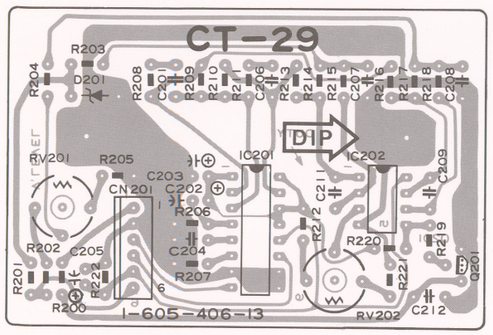

1-605-406-13 SOLDER SIDE

PW-91A (1-605-405-14)

HDSC-1000

CN1	M1	Q1	J3	ZT1	L3
CN2	L2	Q2	J3		
CN3	K4	Q3	I3	WIRING	TERMINAL
CN51	A3	Q71	E1	J72	E2
		Q72	E3	J73	E1
D1	K2	Q73	E3	J74	E2
D2	K1	Q91	D1	J91	D2
D3	L2	Q92	C3	J92	D1
D4	L1	Q111	C1	J111	C2
D5	J3	Q112	C2	J112	C1
D6	K4	Q131	B1	J131	B2
D7	J4	Q132	B3	J132	B1
D8	I2	Q133	A2	J151	B1
D9	I2	Q151	A1	J152	B2
D10	I3			JE71	F3
D11	J4	RV71	D2	JE111	E3
D12	J4	RV72	D4		
D13	I3	RV92	D2		
D14	J4	RV92	D4		
D15	J4	RV111	B2		
D16	I4	RV131	B2		
D17	H4	RV132	B4		
D18	H4	RV151	A2		
D51	G1				
D52	G2	TP1	H1		
D53	G3	TP2	J4		
D54	G4	TP3	J4		
D71	E4	TP71	E1		
D72	E3	TP72	E1		
D73	E3	TP73	E2		
D74	E4	TP74	E4		
D91	C4	TP91	D1		
D92	C3	TP92	D1		
D93	C3	TP93	D2		
D111	C4	TP94	C3		
D112	C3	TP111	C1		
D113	C3	TP112	C1		
D131	B3	TP113	C2		
D132	B3	TP114	C3		
D133	B4	TP131	B1		
D134	A3	TP132	A3		
		TP133	B1		
IC71	D3	TP134	A4		
IC111	B3	TP151	B1		

A
B
C
D
E
F
G
H
J
K
L
M
1
2
3
4
PRIMARY CIRCUIT

POWER SUPPLY PW-91A, CT-29
PW-91A, CT-29 POWER SUPPLY

POWER SUPPLY

PW-91A BOARD ; Switching Regulator

CT-29 BOARD ; Power Supply Control

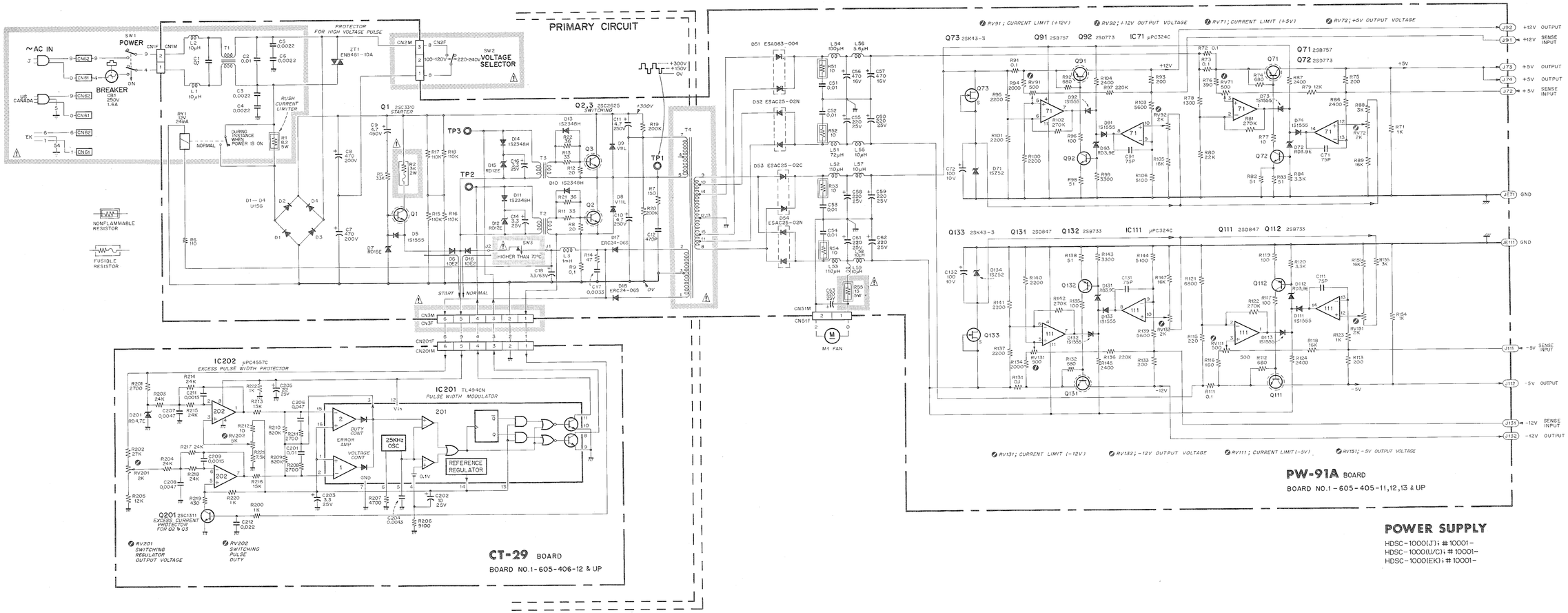

POWER SUPPLY

HDSC-1000(J) ; # 10001-
HDSC-1000(U/C) ; # 10001-
HDSC-1000(EK) ; # 10001-

MB-201 BOARD (1-624-509-11)

Solder Side

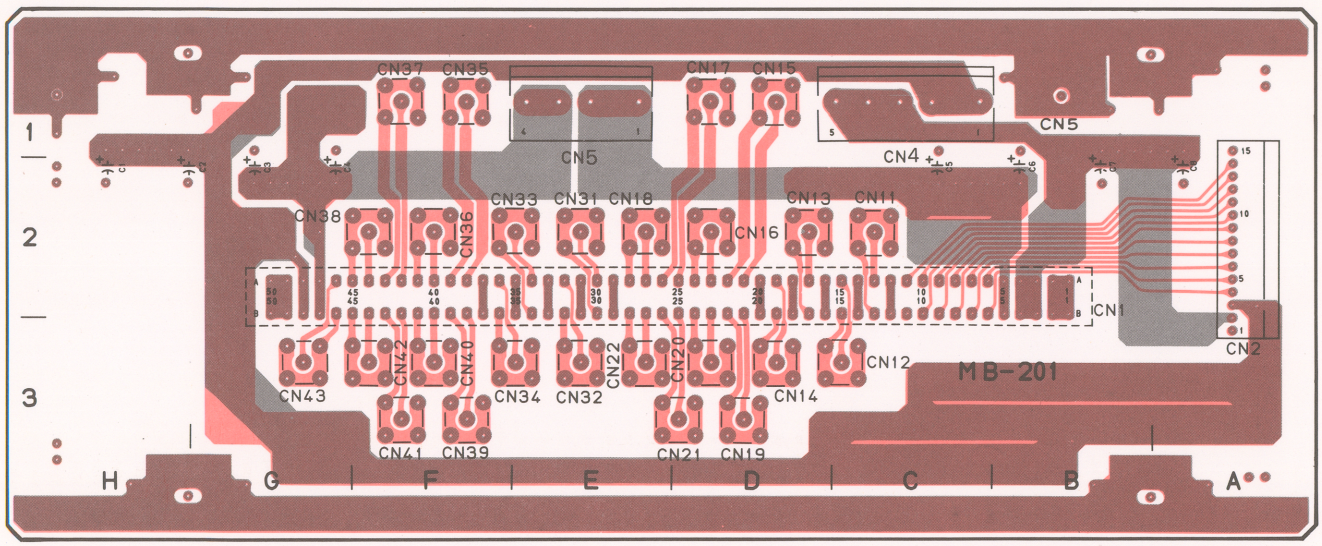

1-624-509-11 COMPONENT SIDE

1-624-509-11 SOLDER SIDE

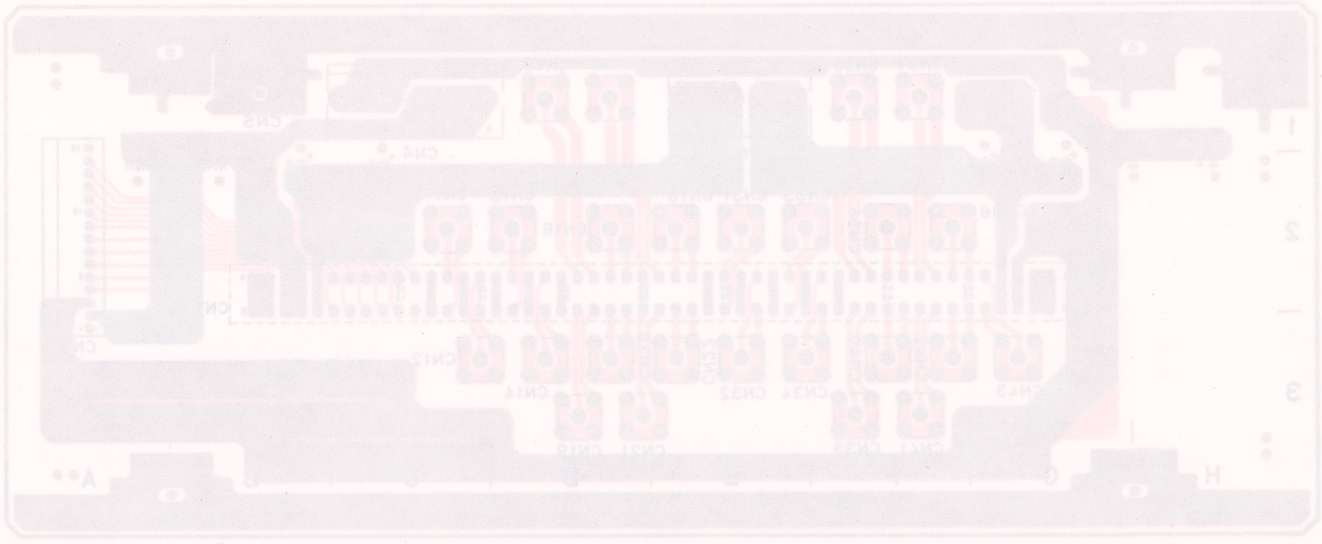

FRAME WIRING

MB-201 BOARD; Mother Board

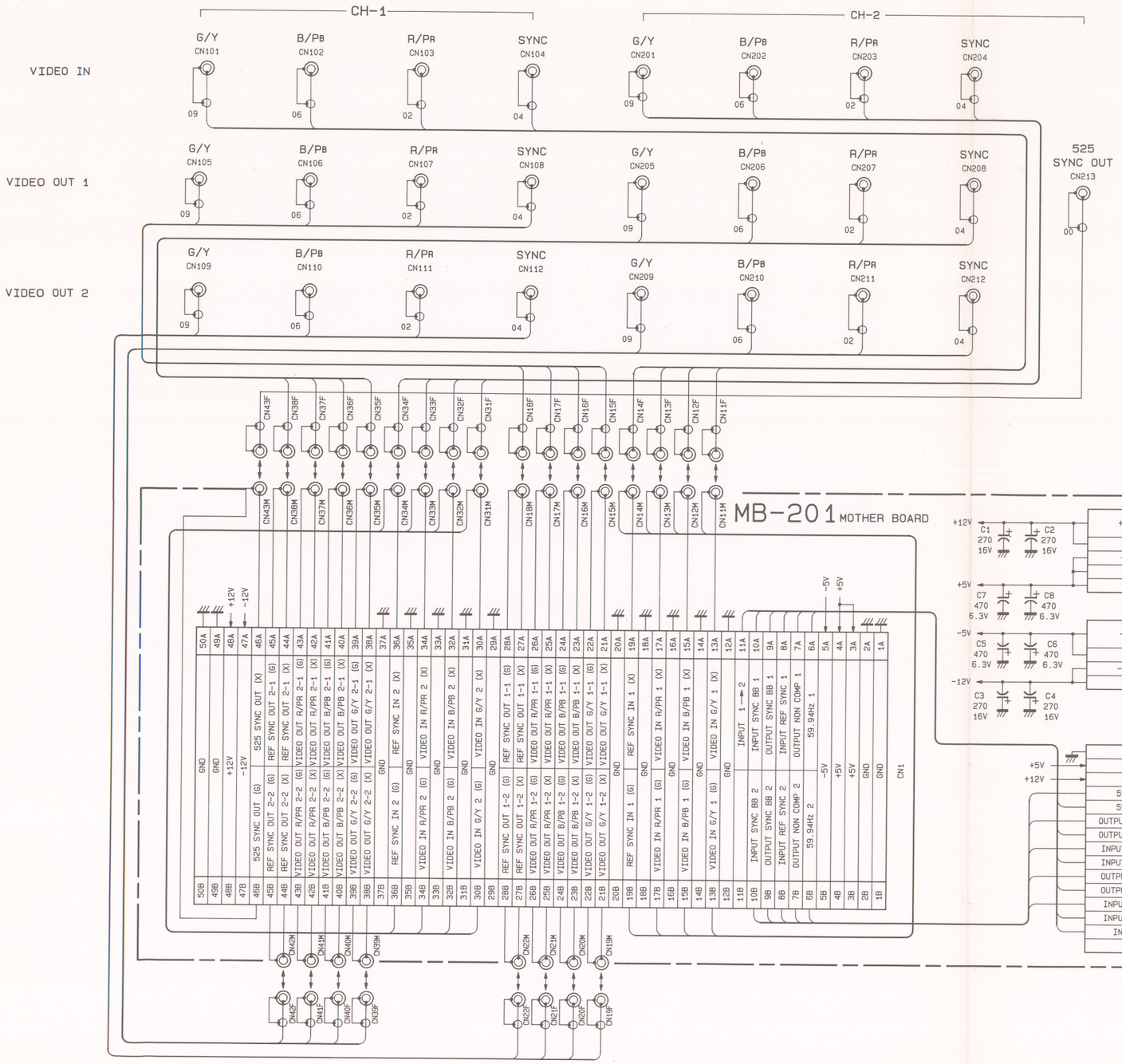

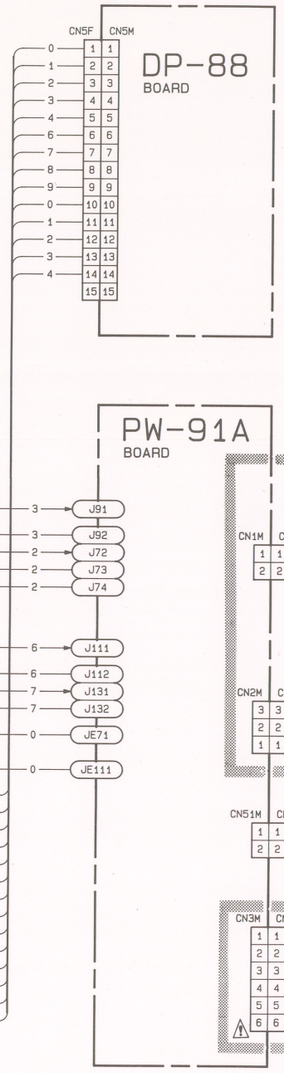

FRAME WIRING
HDSC-1000

SECTION C
SEMICONDUCTOR PIN ASSIGNMENTS

この章の図の中には互換性のないダイオード，トランジスタ，ICが併記されていることがあります。部品を交換するときには必ず部品表を参照して下さい。

等価回路はICメーカーのData Bookに従いました。

The chart in this section may sometimes show diodes, transistors, and ICs that are not interchangeable. When replacing a component, be sure to refer to the parts list.

The circuit diagram of each IC is obtained from the IC data book published by the manufacturer.

TYPE	PAGE
10E1	C-2
10E2	C-2
1N4148H	C-2
1S1555	C-2
1S2076	C-2
1S2348H	C-2
1S2473	C-2
1SS110	C-2
1SS119	C-2
1SS133	C-2
1SS148	C-2
1SS168	C-2
1SZ52	C-2
2SA1005	C-2
2SA1048	C-2
2SB733	C-2
2SB757	C-2
2SC1311	C-2
2SC2026	C-2
2SC2603	C-2
2SC2625	C-2
2SC2724	C-2
2SC3310	C-2
2SD773	C-2
2SD847	C-2
2SK43	C-2
2SK523	C-2
74ACT374PC	C-3
74ACT377PC	C-3
74F04PC	C-3
74F157APC	C-3
74F163APC	C-4
74F175PC	C-4
74F374PC	C-4
74F399PC	C-4
74F74PC	C-5
AM685DL	C-5
BX1244A	C-5
BX365A	C-5
BX366A	C-5
BX3931A	C-5
BX3931A50	C-5
CA3054	C-5
CA3080E	C-6
CA3102E	C-6
CX23043	C-6
CX23065	C-6
CX7930A	C-6
DTA114ES	C-2
DTC114ES	C-2
EQA02-13B	C-2
ERC24-04S	C-2
ERC24-06S	C-2
ERC24-08S	C-2
ESAC25-02C	C-2
ESAC25-02N	C-2
ESAD83-004	C-2
HD10116	C-8
HD10124	C-8
HD10125	C-8
HD10136	C-9
HD74HC00P	C-9
HD74HC14P	C-9
LM3080N	C-9
LT-9002N	C-2
LT9230H	C-2
M54530P	C-9
MB3614	C-9
MB4002	C-9
MB7112L	C-10
MB7134H	C-10
MB7142H	C-10
MBM27C64-25	C-10
MC10116L	C-8
MC10124L	C-8
MC10125L	C-8
MC10136L	C-9
MC10198L	C-11
MC14557BCP	C-11
MC74HC00N	C-9
MC74HC02N	C-11
MC74HC08N	C-11
MC74HC14N	C-9
MC74HC157N	C-12
MC74HC163N	C-12
MC74HC368N	C-12
MC74HC4538N	C-12
MC74HC74N	C-13
NJM4560D	C-13
NJM556D	C-13
RD12E-B	C-2
RD15E-B	C-2
RD3.9E-B	C-2
RD4.7E-B	C-2
RD6.2E-B	C-2
RD8.2E-B3	C-2
SEL2110R	C-2
SEL2310G	C-2
SN7406N	C-13
SN7407N	C-13
SN74HC00N	C-9
SN74HC02N	C-11
SN74HC08N	C-13
SN74HC14N	C-9
SN74HC157N	C-12
SN74HC163N	C-12
SN74HC368N	C-12
SN74HC74N	C-13
SN74HCT574N	C-13
SN74LS221N	C-14
TC4051BPHB	C-14
TC74HC00P	C-9
TC74HC02P	C-11
TC74HC08P	C-13
TC74HC14P	C-9
TC74HC157P	C-12
TC74HC163P	C-12
TC74HC368P	C-12
TC74HC4538P	C-12
TC74HC74P	C-13
TC74HCT574P	C-13
TL082CP	C-14
TL431CLP	C-14
TL494CN	C-14
TL607CP	C-14
TL610CP	C-15
TL721CP	C-15
TLG124A	C-2
TLR124	C-2
U15G	C-2
US1035	C-2
V11L	C-2
VDAC1852N	C-15
uPC324C	C-9
uPC4082C	C14
uPC4557C	C-15

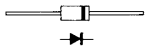

10E-1
10E-2
1N4148H
1S1555
1S2076
1S2348H
1S2473
1SS110
1SS119
1SS133
1SS148
1SS168
ERC24-??S
US1035

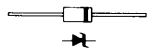

1SZ??
EQA02-???
RD??EB?

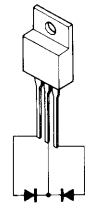

ESAC25-02C

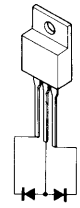

ESAC25-02N

– SIDE VIEW –

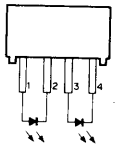

LT-9002N ; YELLOWISH GREEN

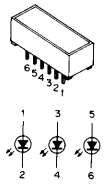

LT-9230H ; YELLOW

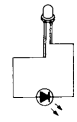

SEL2110R ; RED
SEL2310G ; GREEN
TLG124A ; GREEN
TLR124 ; RED

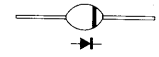

U15?
V11?

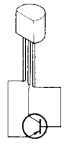

2SA1005

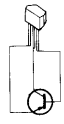

2SA1048

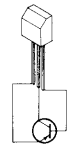

2SB733

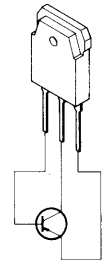

2SB757

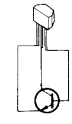

2SC1311
2SC2724

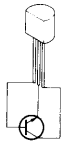

2SC2026
2SC2603

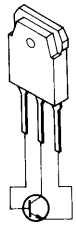

2SC2625
2SD847

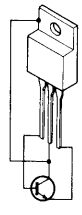

2SC3310

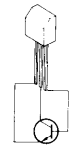

2SD773

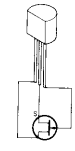

2SK43
2SK523

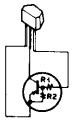

DTA114ES (R1=10K, R2=10K)

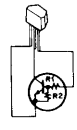

DTC114ES (R1=10K, R2=10K)

74ACT374PC (FSC) (*VDD; +2 to +6V)
HD74HC374P (HITACHI) (*VDD; +2 to +6V)
HD74HCT374P (HITACHI) (*VDD; +5V)
MC74HC374F (MOTOROLA) (*VDD; +2 to +6V) FLAT PACKAGE
MC74HC374N (MOTOROLA) (*VDD; +2 to +6V)
MC74HCT374N (MOTOROLA) (*VDD; +5V)
MN74HC374S (MATSUSHITA) (*VDD; +2 to +6V) FLAT PACKAGE
MSM74HC374RS (OKI) (*VDD; +2 to +6V)
SN74HC374N (TI) (*VDD; +2 to +6V)
SN74HCT374N (TI) (*VDD; +5V)
TC74HC374F (TOSHIBA) (*VDD; +2 to +6V) FLAT PACKAGE
TC74HC374P (TOSHIBA) (*VDD; +2 to +6V)
uPD74HC374C (NEC) (*VDD; +2 to +6V)
uPD74HC374G (NEC) (*VDD; +2 to +6V) FLAT PACKAGE
C-MOS 3-STATE OCTAL D-TYPE FLIP-FLOP
— TOP VIEW —

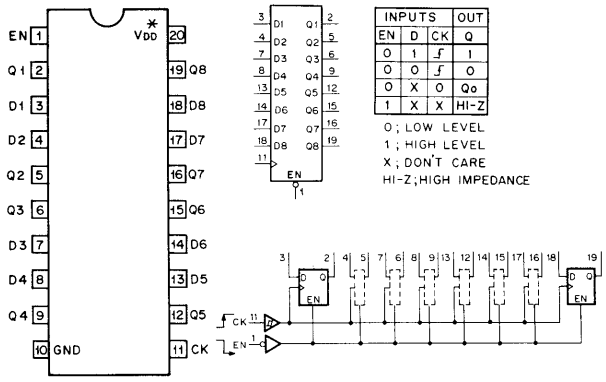

INPUTS			OUT
EN	D	CK	Q
0	1	↑	1
0	0	↑	0
0	X	0	Q0
1	X	X	HI-Z

0 ; LOW LEVEL
1 ; HIGH LEVEL
X ; DON'T CARE
HI-Z ; HIGH IMPEDANCE

74F04PC (FSC)
HD74LS04P (HITACHI)
M53204P (MITSUBISHI)
M74LS04P (MITSUBISHI)
MB74LS04 (FUJITSU)
MC74F04N (MOTOROLA)
N74F04N (SIGNETICS)
SN7404N (TI)
SN74ALS04AN (TI)
SN74ALS04BN (TI)
SN74ALS04N (TI)
SN74AS04N (TI)
SN74L04N (TI)
SN74LS04N (TI)
SN74LS04NS (TI) FLAT PACKAGE
SN74S04N (TI)
TTL INVERTER
— TOP VIEW —

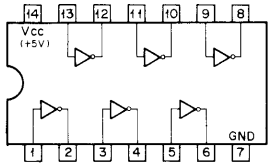

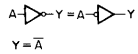

$Y = \overline{A}$

A	Y
0	1
1	0

0 ; LOW LEVEL
1 ; HIGH LEVEL

74F157APC (FSC)
74F157PC (FSC)
HD74LS157P (HITACHI)
M74LS157P (MITSUBISHI)
MB74LS157 (FUJITSU)
MC74F157N (MOTOROLA)
N74F157N (SIGNETICS)
SN74157N (TI)
SN74ALS157N (TI)
SN74AS157N (TI)
SN74L157N (TI)
SN74LS157N (TI)
SN74LS157NS (TI) FLAT PACKAGE
SN74S157N (TI)
TTL 2-LINE-TO-1-LINE DATA SELECTOR/MULTIPLEXER
— TOP VIEW —

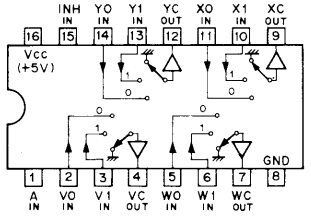

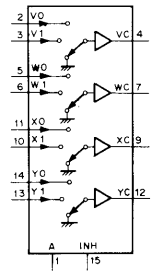

CONT. IN		ON CHANNEL
INH	A	
0	0	0
0	1	1
1	X	GND

0 ; LOW LEVEL
1 ; HIGH LEVEL
X ; DON'T CARE

74ACT377PC (FSC)
HD74HC377P (HITACHI)
SN74HC377N (TI)
TC74HC377F (TOSHIBA) FLAT PACKAGE
TC74HC377P (TOSHIBA)
C-MOS D-TYPE FLIP-FLOP WITH ENABLE
— TOP VIEW —

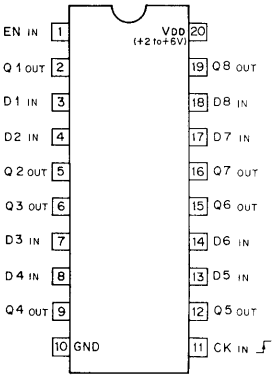

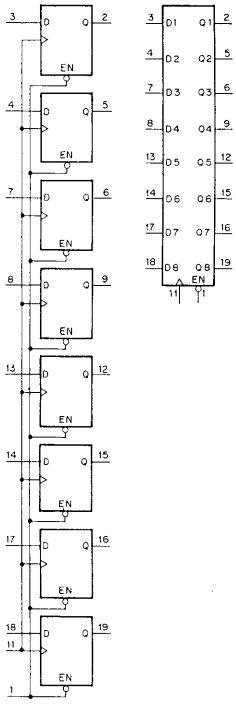

EACH FLIP-FLOP

INPUTS			OUT
EN	CK	D	Q
1	X	X	Q0
0	↑	1	1
0	↑	0	0
X	0	X	Q0

0 ; LOW LEVEL
1 ; HIGH LEVEL
X ; DON'T CARE

74F163APC (FSC)
74F163PC (FSC)
HD74LS163P (HITACHI)
M74LS163P (MITSUBISHI)
MB74LS163A (FUJITSU)
SN74163N (TI)
SN74ALS163AN (TI)
SN74ALS163BN (TI)
SN74ALS163N (TI)
SN74AS163N (TI)
SN74LS163AN (TI)
SN74LS163ANS (TI) FLAT PACKAGE
SN74S163N (TI)
TTL PRESETTABLE SYNCHRONOUS 4-BIT BINARY COUNTER
— TOP VIEW —

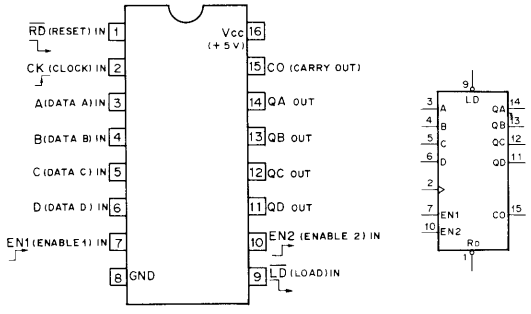

MODE SELECTION

CONTROL INPUTS				MODE
RD	LD	EN1	EN2	
0	X	X	X	RESET (SYNCHRONOUS)
1	0	X	X	PRESET (SYNCHRONOUS)
1	1	0	X	NO COUNT
1	1	X	0	NO COUNT
1	1	1	1	COUNT

0; LOW LEVEL
1; HIGH LEVEL
X; DON'T CARE

COUNT SEQUENCE

COUNT	OUTPUTS			
	QD	QC	QB	QA
0	0	0	0	0
1	0	0	0	1
2	0	0	1	0
3	0	0	1	1
4	0	1	0	0
5	0	1	0	1
6	0	1	1	0
7	0	1	1	1
8	1	0	0	0
9	1	0	0	1
10	1	0	1	0
11	1	0	1	1
12	1	1	0	0
13	1	1	0	1
14	1	1	1	0
15	1	1	1	1

CARRY OUTPUT "CO"

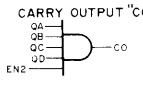

CO IS HIGH WHEN EN2 INPUT IS HIGH AND COUNT IS "15".

74F175PC (FSC)
HD74LS175P (HITACHI)
M74LS175P (MITSUBISHI)
MB74LS175 (FUJITSU)
MC74F175N (MOTOROLA)
SN74175N (TI)
SN74ALS175N (TI)
SN74ALS175NS (TI) FLAT PACKAGE
SN74AS175N (TI)
SN74LS175N (TI)
SN74S175N (TI)
TTL D-TYPE FLIP-FLOP WITH CLEAR
— TOP VIEW —

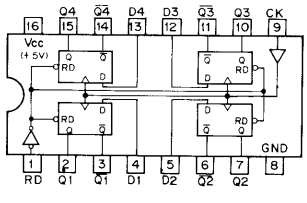

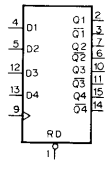

RD	CK	D	Q	$\overline{Q}$
0	X	X	0	1
1	↓	1	1	0
1	↓	0	0	1
1	0	X	Qo	$\overline{Q}$o

0; LOW LEVEL
1; HIGH LEVEL
X; DON'T CARE

74F374PC (FSC)
HD74LS374P (HITACHI)
M74LS374P (MITSUBISHI)
MC74F374N (MOTOROLA)
N74F374N (SIGNETICS)
SN74ALS374N (TI)
SN74AS374N (TI)
SN74LS374N (TI)
SN74LS374NS (TI) FLAT PACKAGE
SN74S374N (TI)
TTL 3-STATE OUTPUTS OCTAL D-TYPE FLIP-FLOP
— TOP VIEW —

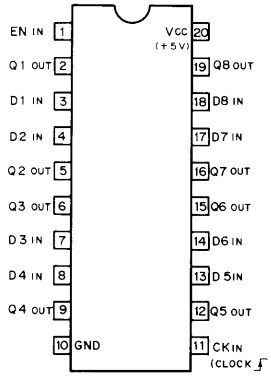

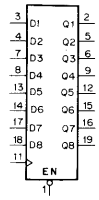

INPUTS			OUT
EN	D	CK	Q
0	1	↓	1
0	0	↓	0
0	X	0	Qo
1	X	X	HI-Z

0; LOW LEVEL
1; HIGH LEVEL
X; DON'T CARE
HI-Z; HIGH IMPEDANCE

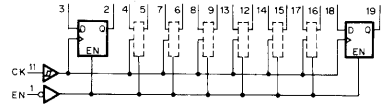

74F399PC (FSC)
SN74LS399N (TI)
SN74LS399NS (TI) FLAT PACKAGE
TTL QUAD 2-INPUT MULTIPLEXER WITH STORAGE
— TOP VIEW —

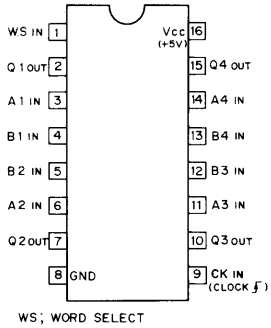

WS; WORD SELECT

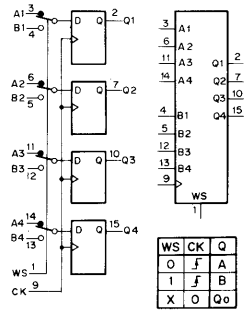

WS	CK	Q
0	↓	A
1	↓	B
X	0	Qo

0; LOW LEVEL
1; HIGH LEVEL
X; DON'T CARE

74F74PC (FSC)
HD74LS74AP (HITACHI)
HD74LS74P (HITACHI)
M53274P (MITSUBISHI)
M74LS74AP (MITSUBISHI)
MB74LS74A (FUJITSU)
MC74F74N (MOTOROLA)
SN7474N (TI)
SN74ALS74AN (TI)
SN74ALS74N (TI)
SN74AS74N (TI)
SN74H74N (TI)
SN74L74N (TI)
SN74LS74AN (TI)
SN74LS74ANS (TI) FLAT PACKAGE
SN74S74N (TI)
TTL D-TYPE FLIP FLOP WITH DIRECT SET/RESET
— TOP VIEW —

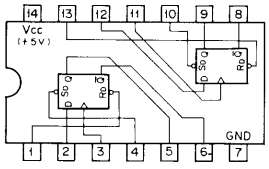

INPUTS				OUTPUTS	
SD	RD	CK	D	Qn+1	$\overline{Qn+1}$
0	1	X	X	1	0
1	0	X	X	0	1
0	0	X	X	1*	1*
1	1	↓	1	1	0
1	1	↓	0	0	1
1	1	0	X	Qn	$\overline{Qn}$

0; LOW LEVEL
1; HIGH LEVEL
X; DON'T CARE
1*; NONSTABLE

AM685DL (ADVANCED MICRO DEVICES)
AD9685BD (ANALOG DEVICES)
VOLTAGE COMPARATOR
(OPEN EMITTER OUTPUTS)
— TOP VIEW — AM685DL

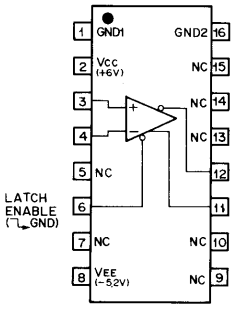

BX1244 (SONY)
BX1244A (SONY)
SAMPLE AND HOLD.
— PRINTED SIDE VIEW —

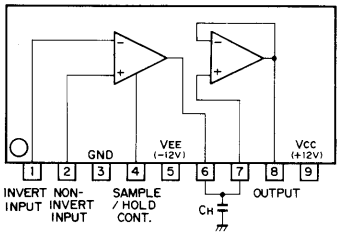

A7015
BX365A (SONY)
BX365AL (ROHM)
VIDEO AMPLIFIER
— SIDE VIEW —

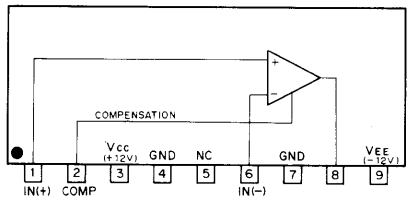

A7021
BX366A (SONY)
BX366AL (ROHM)
VIDEO BUFFER
— SIDE VIEW —

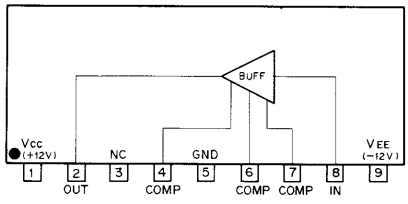

BX3931 (SONY)
BX3931A (SONY)
HYBRID VIDEO WIDEBAND
BUFFER AMPLIFIER
— IMPRINTED SIDE — BX3931

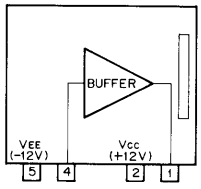

CA3054 (RCA)
DIFFERENTIAL AMPLIFIER
— TOP VIEW —

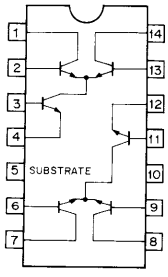

REFERENCE ; LINEAR INTEGRATED CIRCUITS OF RCA

CA3080E (RCA)
OPERATIONAL AMPLIFIER
— TOP VIEW —

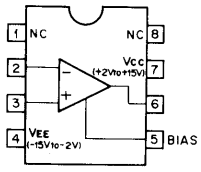

CA3102E (RCA)
CA3102E-S (RCA)
CA3102E-S1 (RCA)
HIGH FREQ.DIFFERNTIAL AMPLIFIER
— TOP VIEW —

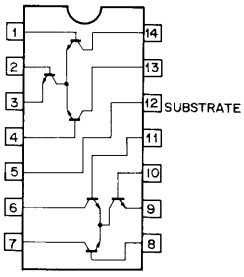

CX23043 (SONY)
N-MOS SYNCHRONOUS 10-BIT BINARY COUNTER
— TOP VIEW —

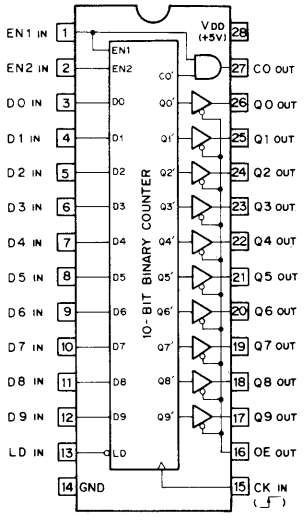

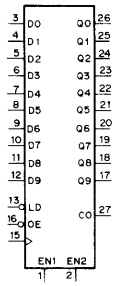

EN1	EN2	LD	FUNCTION
1	1	1	COUNT
0	X	1	NO COUNT
X	0	1	NO COUNT
X	X	0	LOAD

OE	Q0 to Q9 OUTPUT
0	Q0' to Q9'
1	HI-IMPEDANCE

0; LOW LEVEL
1; HIGH LEVEL
X; DON'T CARE

Q0 to Q9; OUTPUTS
Q0' to Q9'; COUNTER OUTPUTS
D0 to D9; INPUTS DATA
CO; CARRY OUTPUT
OE; OUTPUT ENABLE
LD; INPUT DATA LOAD
EN1; CLOCK & CARRY OUT ENABLE
EN2; CLOCK ENABLE
CK; CLOCK INPUT

CARRY OUTPUT "CO"

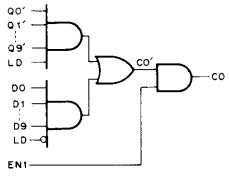

CX23065 (SONY)
N-MOS PHASE COMPARATOR WITH INVERSION AMPLIFIER
— PRINTED SIDE VIEW —

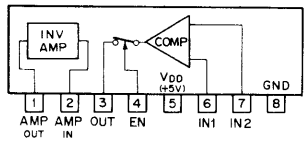

EN	OUT
1	ACTIVE
0	HIGH IMPEDANCE

1; HIGH LEVEL
0; LOW LEVEL

TIMMING CHART

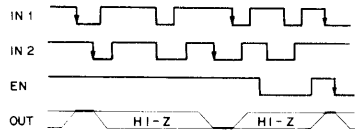

HI-Z; HI-IMPEDANCE

CX7930 (SONY) FLAT PACKAGE
CX7930-1 (SONY) FLAT PACKAGE
CX7930-2 (SONY) FLAT PACKAGE
CX7930A (SONY) FLAT PACKAGE
C-MOS SYNC GENERATOR (NTSC, PAL-M, PAL, SECAM)
— TOP VIEW —

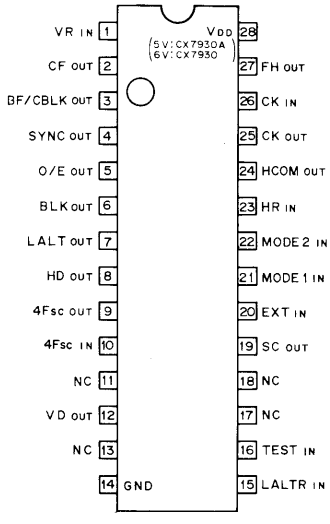

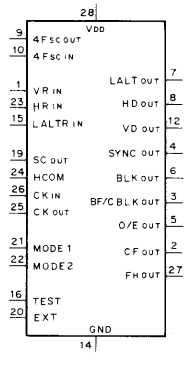

O/E : ODD/EVEN FIELD
CF : COLOR FRAME PULSE
HCOM : H COMPARATOR

SYSTEM	4Fsc	CLOCK
NTSC	910 FH	910 FH
PAL	1135 FH+2Fv	908 FH
PALM	909 FH	910 FH
SECAM	———	908 FH

INPUTS		SYSTEM
MODE 1	MODE 2	
0	0	NTSC
0	1	SECAM
1	0	PALM
1	1	PAL

0; LOW LEVEL (GND)
1; HIGH LEVEL (VDD)

INPUTS		FUNCTION
EXT	TEST	
0	0	INTERNAL
0	1	INVALID
1	0	EXT
1	1	TEST

TEST "0" OPEN (INTERNALLY PULLED DOWN)

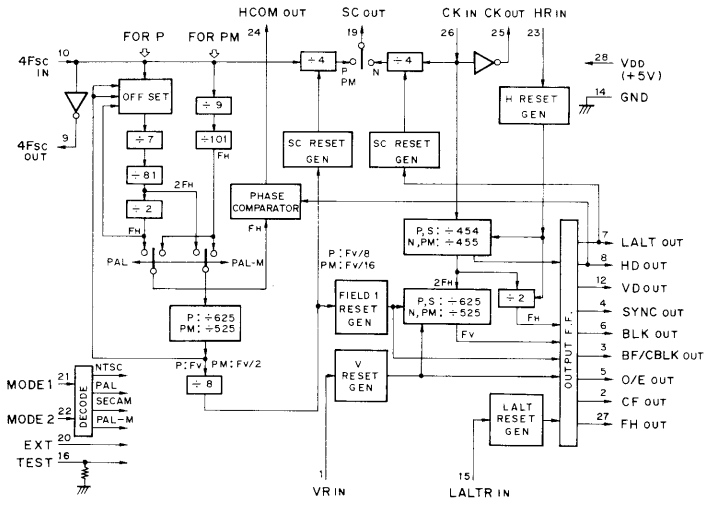

NTSC, PAL-M (FIELD 2, 4)

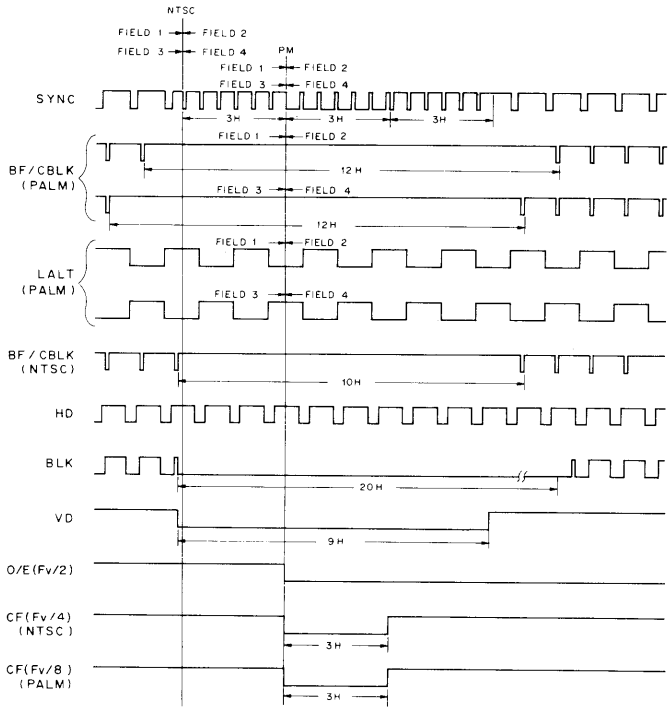

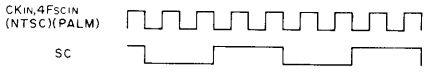

NTSC, PAL-M (FIELD 1, 3)

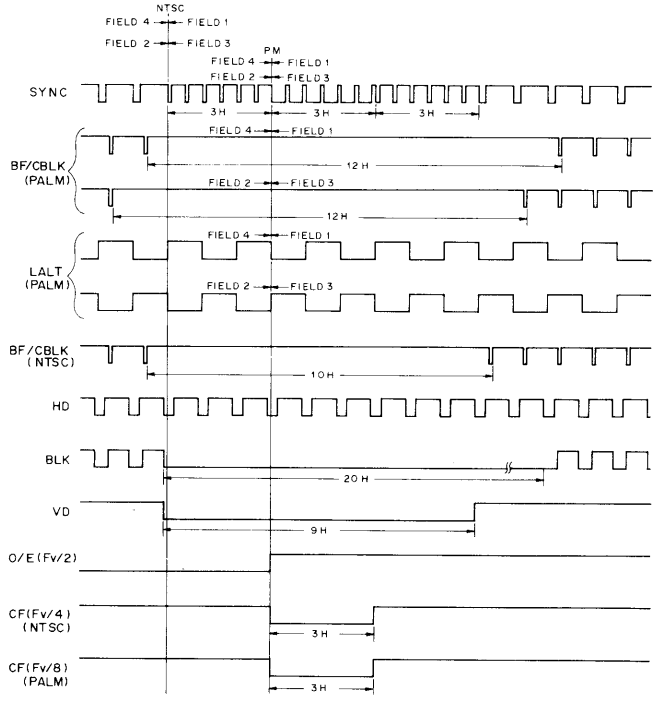

PAL, SECAM (FIELD 4, 2)

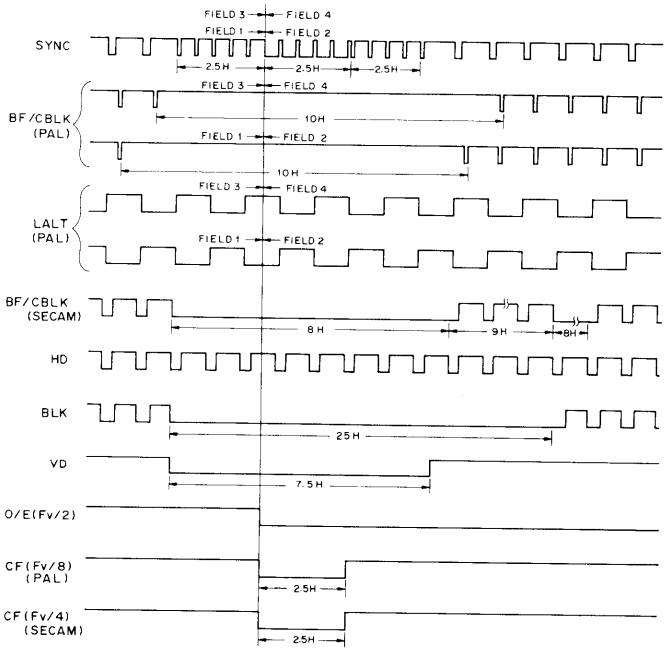

PAL, SECAM (FIELD1,3)

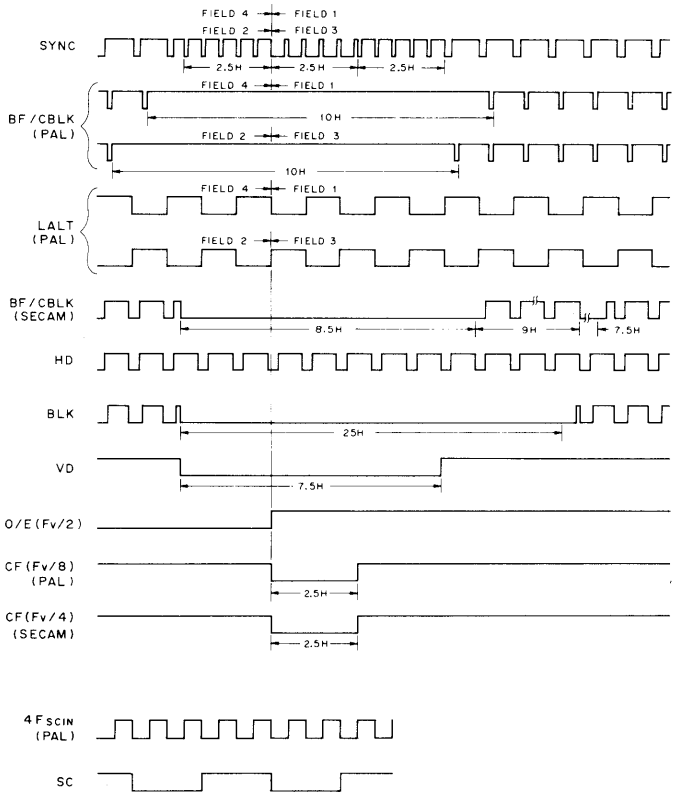

P: PAL, SECAM
N: NTSC, PALM

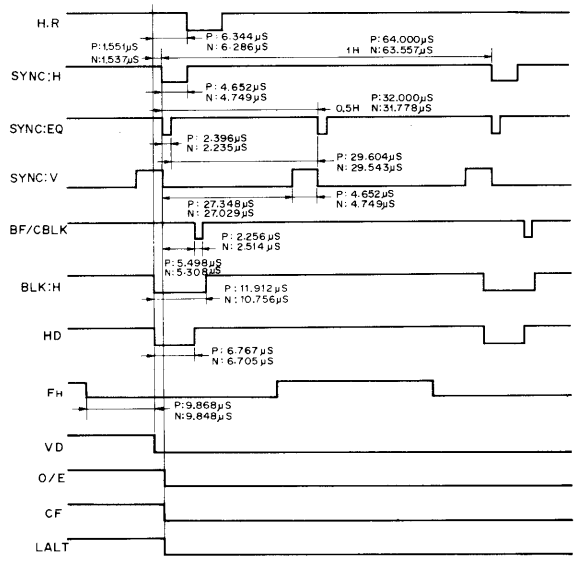

HD10116 (HITACHI)
MC10116L (MOTOROLA)
MC10H116F (MOTOROLA) FLAT PACKAGE
MC10H116L (MOTOROLA)
MC10H116M (MOTOROLA) FLAT PACKAGE
ECL DIFFERENTIAL OR/NOR LINE RECEIVER
— TOP VIEW —

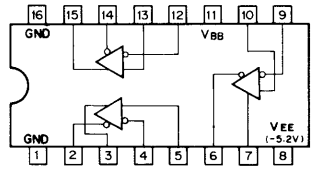

F10124 (FSC)
HD10124 (HITACHI)
MC10124L (MOTOROLA)
MC10H124F (MOTOROLA) FLAT PACKAGE
MC10H124L (MOTOROLA)
MC10H124M (MOTOROLA) FLAT PACKAGE
ECL TTL-TO-ECL TRANSLATOR
— TOP VIEW —

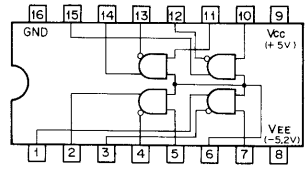

F10125 (FSC)
HD10125 (HITACHI)
HD2923 (HITACHI)
MC10125L (MOTOROLA)
MC10H125F (MOTOROLA) FLAT PACKAGE
MC10H125L (MOTOROLA)
MC10H125M (MOTOROLA) FLAT PACKAGE
ECL ECL-TO-TTL TRANSLATOR
— TOP VIEW —

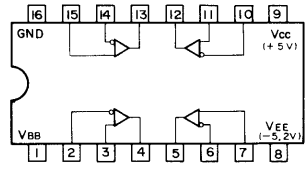

HD10136 (HITACHI)
MC10136L (MOTOROLA)
ECL PROGRAMMABLE SYNCHRONOUS 4-BIT BINARY UP/DOWN COUNTER
— TOP VIEW —

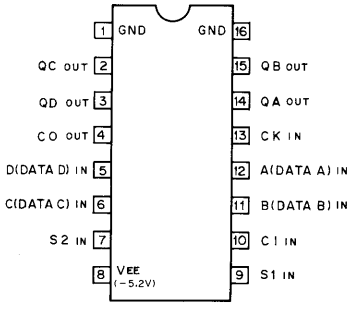

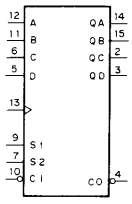

MODE SELECTION

INPUTS			MODE
S1	S2	CI	
0	0	X	PRESET (LOAD)
0	1	0	COUNT UP
1	0	0	COUNT DOWN
1	1	X	COUNT HOLD
X	X	1	COUNT DISABLE

0 ; LOW LEVEL
1 ; HIGH LEVEL
X ; DON'T CARE

COUNT SEQUENCE

COUNT	OUTPUTS			
	QD	QC	QB	QA
0	0	0	0	0
1	0	0	0	1
2	0	0	1	0
3	0	0	1	1
4	0	1	0	0
5	0	1	0	1
6	0	1	1	0
7	0	1	1	1
8	1	0	0	0
9	1	0	0	1
10	1	0	1	0
11	1	0	1	1
12	1	1	0	0
13	1	1	0	1
14	1	1	1	0
15	1	1	1	1

CO GOES LOW WHEN COUNT GOES "15" AT UP-COUNT OR WHEN COUNT GOES "0" AT DOWN COUNT OR WHEN THE COUNTER IS BEING PRESET.

CI INPUT ALLOWS SEVERAL DEVICES TO BE CASCADED IN A FULLY SYNCHRONOUS MULTISTAGE COUNTER.

LM3080N (NSC)
OPERATIONAL AMPLIFIER
— TOP VIEW —

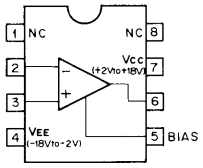

IR2411 (SHARP)
M54530P (MITSUBISHI)
INVERTER WITH OPEN-COLLECTOR
(DARLINGTON TRANSISTOR ARRAY WITH CLAMP DIODE)
— TOP VIEW —

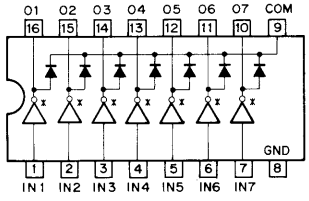

✱ ; OPEN COLLECTOR

HD74HC00P (HITACHI)
MC74HC00F (MOTOROLA) FLAT PACKAGE
MC74HC00N (MOTOROLA)
MN74HC00S (MATSUSHITA) FLAT PACKAGE
MSM74HC00RS (OKI)
SN74HC00N (TI)
SN74HC00NS (TI) FLAT PACKAGE
TC74HC00F (TOSHIBA) FLAT PACKAGE
TC74HC00P (TOSHIBA)
uPD74HC00C (NEC)
uPD74HC00G (NEC) FLAT PACKAGE
C-MOS 2-INPUT NAND GATE
— TOP VIEW —

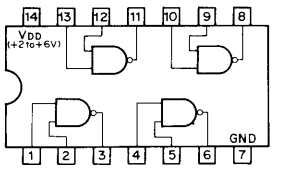

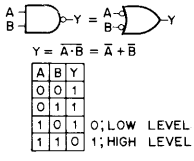

A	B	Y
0	0	1
0	1	1
1	0	1
1	1	0

0 ; LOW LEVEL
1 ; HIGH LEVEL

CA324 (RCA)
IR3702 (SHARP)
LM324 (NS)
LM324N (TI)
MB3614 (FUJITSU)
uPC324C (NEC)
uPC324G2 (NEC) FLAT PACKAGE
QUAD. OP AMPLIFIER
— TOP VIEW —

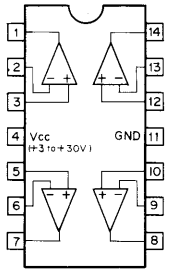

HD74HC14P (HITACHI)
MC74HC14N (MOTOROLA)
MSM74HC14RS (OKI)
SN74HC14N (TI)
TC74HC14F (TOSHIBA) FLAT PACKAGE
TC74HC14P (TOSHIBA)
uPD74HC14C (NEC)
uPD74HC14G (NEC) FLAT PACKAGE
C-MOS SCHMITT TRIGGER INVERTER
— TOP VIEW —

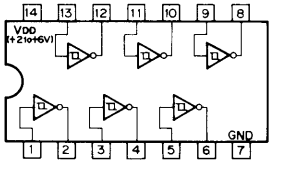

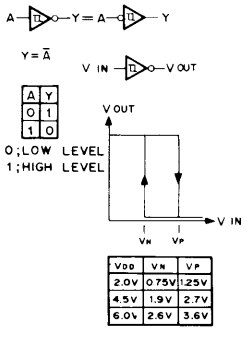

A	Y
0	1
1	0

0 ; LOW LEVEL
1 ; HIGH LEVEL

VDD	VN	VP
2.0V	0.75V	1.25V
4.5V	1.9V	2.7V
6.0V	2.6V	3.6V

MB4001P (FUJITSU)
MB4002 (FUJITSU)
HIGH SPEED VOLTAGE COMPARATOR
— TOP VIEW —

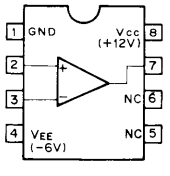

MB7112E (FUJITSU) (ACCESS TIME = 35 nS)
MB7112H (FUJITSU) (ACCESS TIME = 25 nS)
MB7112L (FUJITSU) (ACCESS TIME = 50 nS)
256-BIT (32x8) PROM WITH 3-STATE OUTPUT
— TOP VIEW —

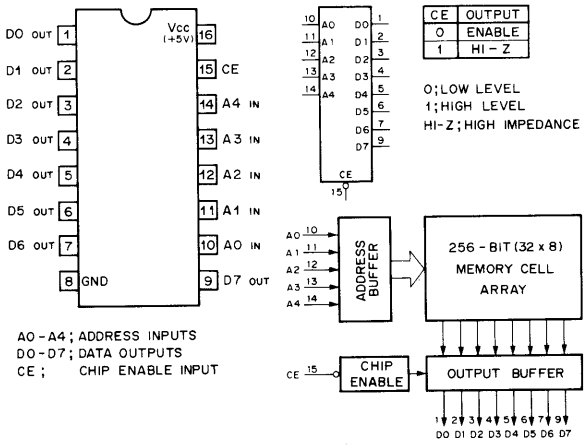

CE	OUTPUT
0	ENABLE
1	HI-Z

0; LOW LEVEL
1; HIGH LEVEL
HI-Z; HIGH IMPEDANCE

MB7142E (FUJITSU) (ACCESS TIME = 65 nS)
MB7142H (FUJITSU) (ACCESS TIME = 55 nS)
32768 BIT (4096x8) PROM WITH 3-STATE OUTPUTS
— TOP VIEW —

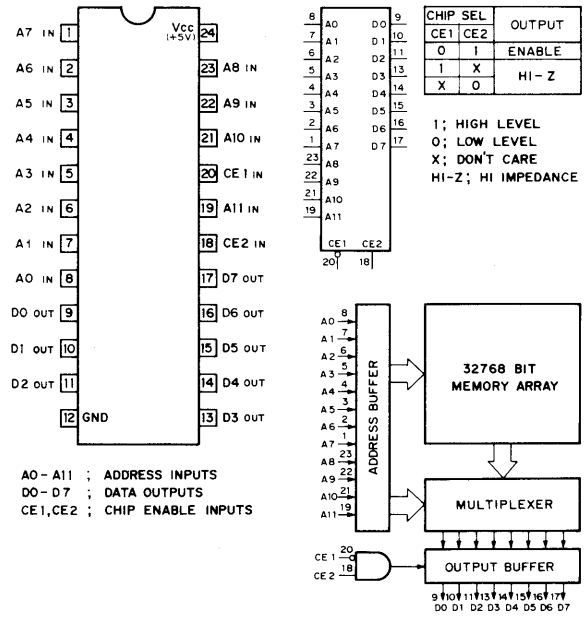

CHIP SEL		OUTPUT
CE1	CE2	
0	1	ENABLE
1	X	HI-Z
X	0	

1; HIGH LEVEL
0; LOW LEVEL
X; DON'T CARE
HI-Z; HI IMPEDANCE

MB7134E (FUJITSU) (ACCESS TIME = 45 nS)
MB7134H (FUJITSU) (ACCESS TIME = 55 nS)
MB7134Y (FUJITSU) (ACCESS TIME = 35 nS)
16384-BIT (4096x4) PROM WITH 3-STATE OUTPUT
— TOP VIEW —

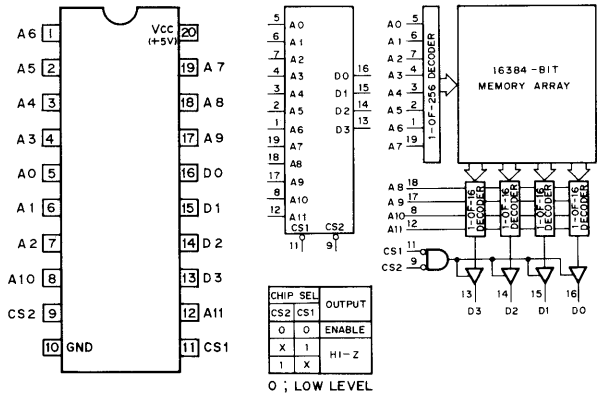

CHIP SEL		OUTPUT
CS2	CS1	
0	0	ENABLE
X	1	HI-Z
1	X	

0 ; LOW LEVEL
1 ; HIGH LEVEL
X ; DON'T CARE
HI-Z ; HIGH IMPEDANCE

HN27C64G-20 (HITACHI) (ACCESS TIME = 200 nS)
MBM27C64-20 (FUJITSU) (ACCESS TIME = 200 nS)
MBM27C64-25 (FUJITSU) (ACCESS TIME = 250 nS)
MBM27C64-30 (FUJITSU) (ACCESS TIME = 300 nS)
C-MOS 64K (8K-8) ERASABLE PROM WITH 3-STATE OUTPUTS
— TOP VIEW —

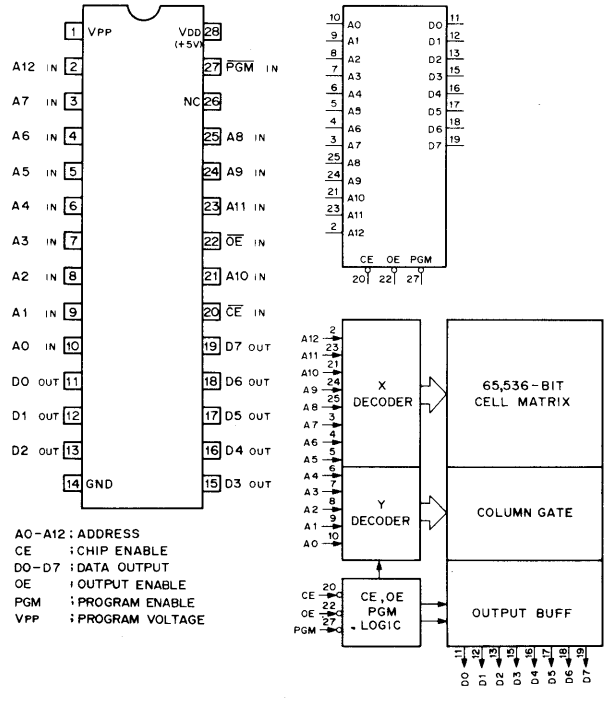

An	CE	OE	PGM	VPP	Dn	FUNCTION
An	0	0	1	+5V	D OUT	READ
An	0	1	1	+5V	HI-Z	OUTPUT DISABLE
An	0	0	0	+5V	HI-Z	OUTPUT DISABLE
X	1	X	X	+5V	HI-Z	STANDBY
An	0	X	⊓	+21V	DIN	PGM
An	0	0	1	+21V	D OUT	PGM VERIFY
X	1	X	X	+21V	HI-Z	PGM INH

0; LOW LEVEL
1; HIGH LEVEL
X; DON'T CARE
HI-Z; HIGH IMPEDANCE

MC10198L (MOTOROLA)
ECL RETRIGGERABLE MONOSTABLE MULTIVIBRATOR
— TOP VIEW —

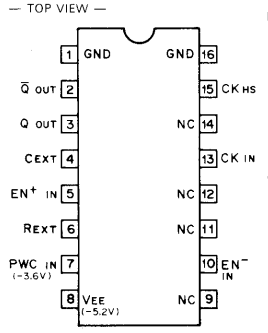

RETRIGGERABLE MMV

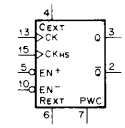

NON-RETRIGGERABLE MMV

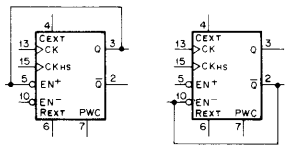

CK : CLOCK TRIGGER INPUT
CKHS: HIGH-SPEED CLOCK TRIGGER INPUT
EN+ : TRIGGER POSITIVE ENABLE
EN− : TRIGGER NEGATIVE ENABLE
PWC : EXTERNAL PULSE WIDTH CONTROL

FUNCTION TABLE

EN+	EN−	TRIG. SLOPE
0	0	↓
0	1	↓
1	0	↑
1	1	DISABLE

0; LOW LEVEL
1; HIGH LEVEL

OUTPUT PULSE WIDTH : PWQ
PWQ = 1.19 · CEXT (REXT +284)
WHERE
PWQ = SEC
CEXT = FARADS
REXT = OHMS
VEE = −5.2V
PWC = −3.6V

NOTE ; · SELECT REXT RANGING FROM ZERO TO 16K OHMS.
· SELECT CEXT GREATER THAN 20PF.

HD14557BFP (HITACHI) FLAT PACKAGE
HD14557BP (HITACHI)
MC14557BCP (MOTOROLA)
MC14557BF (MOTOROLA) FLAT PACKAGE
C-MOS 1-TO-64-BIT VARIABLE LENGTH SHIFT REGISTER
— TOP VIEW —

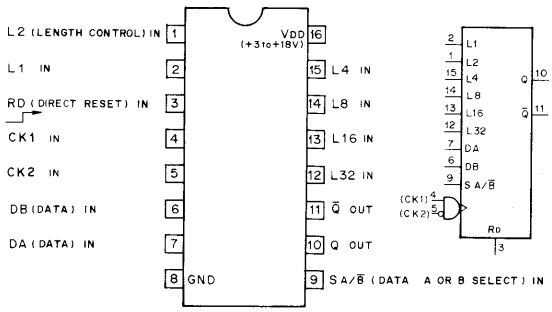

LENGTH SELECT TRUTH TABLE

L32	L16	L8	L4	L2	L1	REGISTER LENGTH
0	0	0	0	0	0	1-BIT
0	0	0	0	0	1	2-BIT
0	0	0	0	1	0	3-BIT
0	0	0	0	1	1	4-BIT
0	0	0	1	0	0	5-BIT
⋮	⋮	⋮	⋮	⋮	⋮	⋮
1	1	1	1	0	0	61-BIT
1	1	1	1	0	1	62-BIT
1	1	1	1	1	0	63-BIT
1	1	1	1	1	1	64-BIT

INPUTS				OUTPUT
RD	SA/B̄	CK1	CK2	Q
0	0	↓	0	DB
0	1	↓	0	DA
0	0	1	↓	DB
0	1	1	↓	DA
1	X	X	X	0

0 ; LOW LEVEL
1 ; HIGH LEVEL
X ; DON'T CARE

HD74HC02P (HITACHI)
MC74HC02F (MOTOROLA) FLAT PACKAGE
MC74HC02N (MOTOROLA)
MSM74HC02RS (OKI)
SN74HC02N (TI)
SN74HC02NS (TI) FLAT PACKAGE
TC74HC02F (TOSHIBA) FLAT PACKAGE
TC74HC02P (TOSHIBA)
uPD74HC02C (NEC)
C MOS 2-INPUT POSITIVE-NOR GATE
— TOP VIEW —

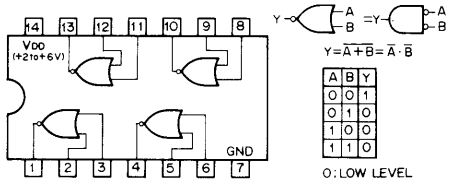

A	B	Y
0	0	1
0	1	0
1	0	0
1	1	0

0; LOW LEVEL
1; HIGH LEVEL

74F08PC (FSC)
HD74LS08N (HITACHI)
HD74LS08P (HITACHI)
M74LS08P (MITSUBISHI)
MB74LS08 (FUJITSU)
MC74F08N (MOTOROLA)
N74F08N (SIGNETICS)
SN7408N (TI)
SN74ALS08N (TI)
SN74AS08N (TI)
SN74LS08N (TI)
SN74S08N (TI)
TTL 2-INPUT POSITIVE-AND GATE
— TOP VIEW —

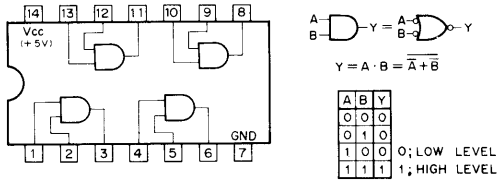

A	B	Y
0	0	0
0	1	0
1	0	0
1	1	1

0; LOW LEVEL
1; HIGH LEVEL

HD74HC157P (HITACHI)
MC74HC157N (MOTOROLA)
MSM74HC157RS (OKI)
SN74HC157N (TI)
TC74HC157F (TOSHIBA) FLAT PACKAGE
TC74HC157P (TOSHIBA)
uPD74HC157C (NEC)
C-MOS 2-LINE-TO-1-LINE DATA SELECTOR/MULTIPLEXER
— TOP VIEW —

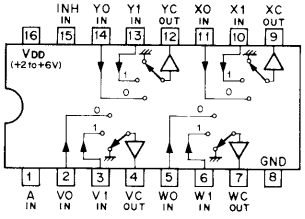

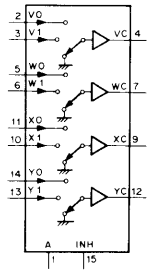

CONT. IN		ON CHANNEL
INH	A	
0	0	0
0	1	1
1	X	GND

0 ; LOW LEVEL
1 ; HIGH LEVEL
X ; DON'T CARE

HD74HC368P (HITACHI)
MC74HC368N (MOTOROLA)
SN74HC368N (TI)
SN74HC368NS (TI) FLAT PACKAGE
TC74HC368P (TOSHIBA)
C-MOS BUS INVERTER WITH 3-STATE OUTPUTS
— TOP VIEW —

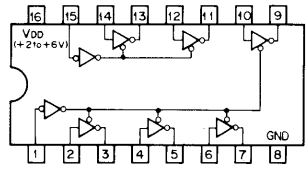

G	A	Y
0	0	1
0	1	0
1	X	HI-Z

0 ; LOW LEVEL
1 ; HIGH LEVEL
X ; DON'T CARE
HI-Z ; HIGH IMPEDANCE

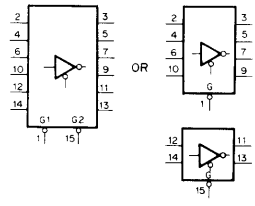

HD74HC163P (HITACHI)
MC74HC163F (MOTOROLA) FLAT PACKAGE
MC74HC163N (MOTOROLA)
MSM74HC163RS (OKI)
SN74HC163N (TI)
TC74HC163F (TOSHIBA) FLAT PACKAGE
TC74HC163P (TOSHIBA)
uPD74HC163C (NEC)
C-MOS PRESETTABLE SYNCHRONOUS 4-BIT BINARY COUNTER
— TOP VIEW —

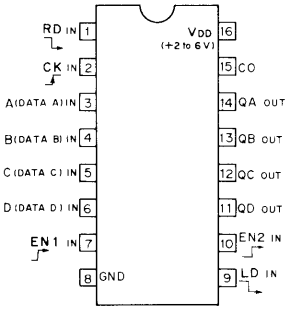

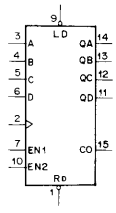

MODE SELECTION

CONTROL INPUTS				MODE
RD	LD	EN1	EN2	
0	X	X	X	RESET (SYNCHRONOUS)
1	0	X	X	PRESET (SYNCHRONOUS)
1	1	0	X	NO COUNT
1	1	X	0	NO COUNT
1	1	1	1	COUNT

CARRY OUTPUT "CO"

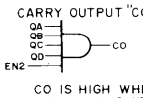

CO IS HIGH WHEN EN2 INPUT IS HIGH AND COUNT IS "15".

COUNT SEQUENCE

COUNT	OUTPUTS			
	QD	QC	QB	QA
0	0	0	0	0
1	0	0	0	1
2	0	0	1	0
3	0	0	1	1
4	0	1	0	0
5	0	1	0	1
6	0	1	1	0
7	0	1	1	1
8	1	0	0	0
9	1	0	0	1
10	1	0	1	0
11	1	0	1	1
12	1	1	0	0
13	1	1	0	1
14	1	1	1	0
15	1	1	1	1

HD74HC4538P (HITACHI)
MC74HC4538N (MOTOROLA)
MSM74HC4538RS (OKI)
TC74HC4538P (TOSHIBA)
C-MOS DUAL RETRIGGERABLE/NON-RETRIGGERABLE MONOSTABLE MULTIVIBRATOR
— TOP VIEW —

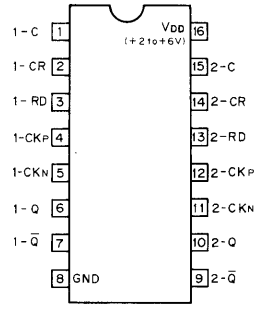

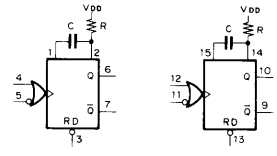

OUTPUT PULSE WIDTH = k·C·R

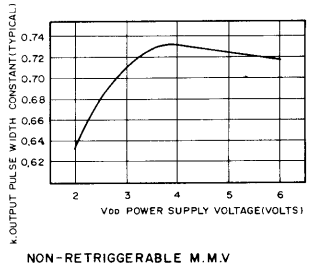

RETRIGGERABLE M.M.V

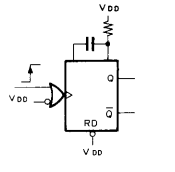

NON-RETRIGGERABLE M.M.V

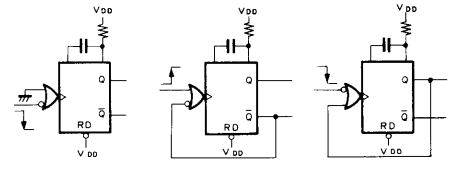

HD74HC74P (HITACHI)
MC74HC74F (MOTOROLA) FLAT PACKAGE
MC74HC74N (MOTOROLA)
MN74HC74S (MATSUSHITA) FLAT PACKAGE
MSM74HC74RS (OKI)
SN74HC74N (TI)
SN74HC74NS (TI) FLAT PACKAGE
TC74HC74F (TOSHIBA) FLAT PACKAGE
TC74HC74P (TOSHIBA)
uPD74HC74C (NEC)
uPD74HC74G (NEC) FLAT PACKAGE
C-MOS D-TYPE FLIP FLOP WITH DIRECT SET/RESET
— TOP VIEW —

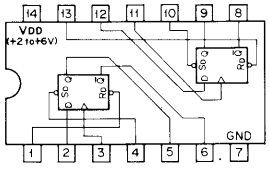

INPUTS				OUTPUTS	
$\overline{S_D}$	$\overline{R_D}$	CK	D	Qn+1	$\overline{Q_{n+1}}$
0	1	X	X	1	0
1	0	X	X	0	1
0	0	X	X	1*	1*
1	1	↑	1	1	0
1	1	↑	0	0	1
1	1	0	X	Qn	$\overline{Q_n}$

0 ; LOW LEVEL
1 ; HIGH LEVEL
X ; DON'T CARE
1* ; NONSTABLE

NJM4560D (JRC)
NJM4560DD (JRC)
NJM4560DN (JRC)
NJM4560DX (JRC)
NJM4560M (JRC) FLAT PACKAGE
OPERATIONAL AMPLIFIER
— TOP VIEW —

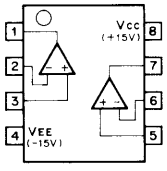

NJM556D (JRC)
DUAL TIMER
— TOP VIEW —

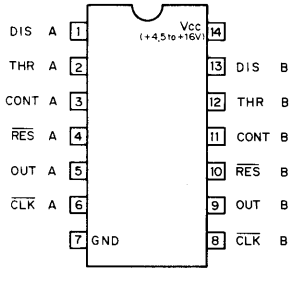

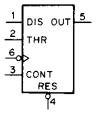

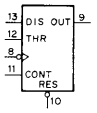

CLK ; CLOCK
CONT ; CONTROL
DIS ; DISCHARGE
RES ; RESET
THR ; THRESHOLD

HD7406P (HITACHI)
M53206P (MITSUBISHI)
SN7406N (TI)
SN7406NS (TI) FLAT PACKAGE
SN74LS06N (TI)
SN74LS06NS (TI) FLAT PACKAGE
TTL INVERTER BUFFER/DRIVER WITH OPEN-COLLECTOR
— TOP VIEW —

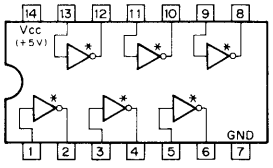

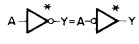

Y = $\overline{A}$

A	Y
0	1
1	0

0 ; LOW LEVEL
1 ; HIGH LEVEL
* ; OPEN COLLECTOR

MB74LS07 (FUJITSU)
SN7407N (TI)
SN7407NS (TI) FLAT PACKAGE
TTL BUFFER/DRIVER WITH OPEN-COLLECTOR
— TOP VIEW —

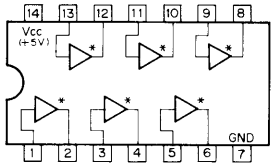

A	Y
0	0
1	1

0 ; LOW LEVEL
1 ; HIGH LEVEL
* ; OPEN COLLECTOR

HD74HC08P (HITACHI)
MC74HC08N (MOTOROLA)
SN74HC08N (TI)
SN74HC08NS (TI) FLAT PACKAGE
TC74HC08F (TOSHIBA) FLAT PACKAGE
TC74HC08P (TOSHIBA)
uPD74HC08C (NEC)
C-MOS 2-INPUT AND GATE
— TOP VIEW —

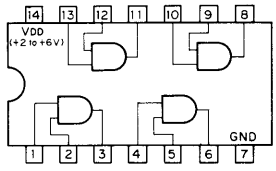

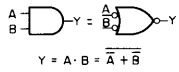

A	B	Y
0	0	0
0	1	0
1	0	0
1	1	1

0 ; LOW LEVEL
1 ; HIGH LEVEL

MC74HC574N (MOTOROLA)
MSM74HC574RS (OKI)
SN74HC574N (TI)
SN74HCT574N (TI)
TC74HC574F (TOSHIBA) FLAT PACKAGE
TC74HC574P (TOSHIBA)
TC74HCT574P (TOSHIBA)
uPD74HC574C (NEC)
C-MOS 3-STATE D-TYPE EDGE-TRIGGERED FLIP-FLOP
— TOP VIEW —

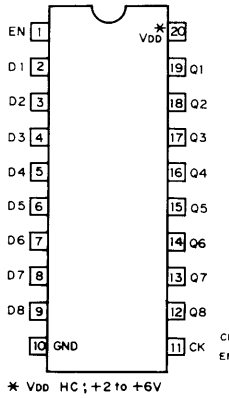

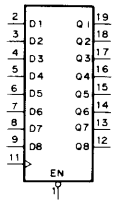

EACH FLIP-FLOP

INPUTS			OUT
EN	CK	D	Q
0	↑	1	1
0	↑	0	0
0	0	X	Q0
1	X	X	HI-Z

0 ; LOW LEVEL
1 ; HIGH LEVEL
X ; DON'T CARE
HI-Z ; HIGH IMPEDANCE

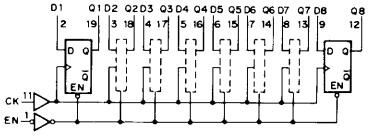

* VDD HC ; +2 to +6V
HCT ; +5V

HD74LS221P (HITACHI)
MB74LS221 (FUJITSU)
SN74221N (TI)
SN74LS221N (TI)
SN74LS221NS (TI) FLAT PACKAGE
TTL MONOSTABLE MULTIVIBRATOR WITH SCHMITT TRIGGER INPUT
— TOP VIEW —

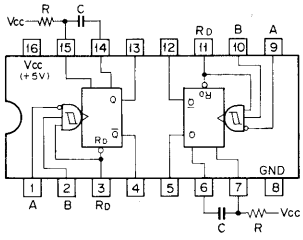

INPUTS			OUTPUTS	
RD	A	B	Q	$\overline{Q}$
0	X	X	0	1
X	1	X	0	1
X	X	0	0	1
1	0	↓	⊓	⊔
1	↓	1	⊓	⊔
↑	0	1	⊓	⊔

0 ; LOW LEVEL
1 ; HIGH LEVEL
X ; DON'T CARE

OUTPUT PULSE WIDTH = 0.7CR

CD4051BE (RCA)
F4051BPC (FSC)
HD14051BP (HITACHI)
MB84051B (FUJITSU)
MC14051BCP (MOTOROLA)
MSM4051BRS (OKI)
TC4051BF (TOSHIBA) FLAT PACKAGE
TC4051BP (TOSHIBA)
TC4051BPHB (TOSHIBA)
TP4051B (TI)
uPD4051BC (NEC)
C-MOS 8-CHANNEL MULTIPLEXER/DEMULTIPLEXER
— TOP VIEW —

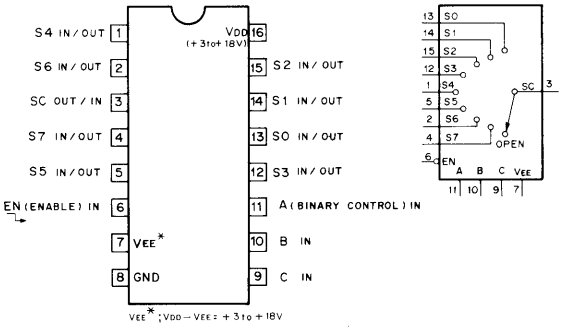

EN	C	B	A	"ON" CHANNEL
0	0	0	0	0
0	0	0	1	1
0	0	1	0	2
0	0	1	1	3
0	1	0	0	4
0	1	0	1	5
0	1	1	0	6
0	1	1	1	7
1	X	X	X	OPEN

0 ; LOW LEVEL
1 ; HIGH LEVEL
X ; DON'T CARE

TL082ACP (TI)
TL082BCP (TI)
TL082CP (TI)
TL082CPS (TI) FLAT PACKAGE
uPC4082C (NEC)
uPC4082G2 (NEC) FLAT PACKAGE
OPERATIONAL AMPLIFIER
(J FET-INPUT)
— TOP VIEW —

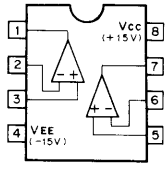

TL431CLP (TI)
TL431CLPB (TI)
ADJUSTABLE PRECISION SHUNT REGULATOR

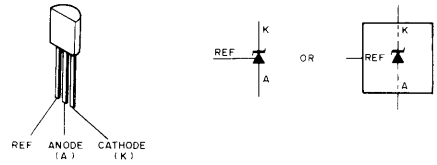

IR9494 (SHARP)
IR3M02 (SHARP)
MB3759 (FUJITSU)
TL494CN (TI)
TL494CNS (TI) FLAT PACKAGE
uPC494C (NEC)
PWM POWER CONTROL
— TOP VIEW —

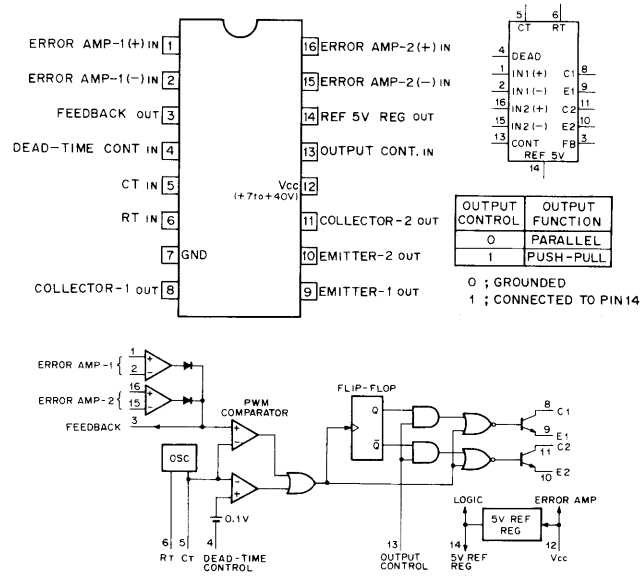

OUTPUT CONTROL	OUTPUT FUNCTION
0	PARALLEL
1	PUSH-PULL

0 ; GROUNDED
1 ; CONNECTED TO PIN 14

SN72607P (TI)
TL607CP (TI)
TL607CPS (TI) FLAT PACKAGE
P-MOS ANALOG SWITCH
— TOP VIEW —

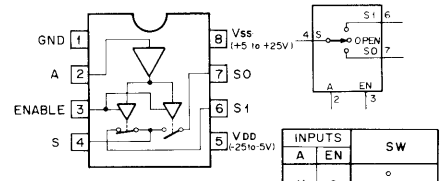

INPUTS		SW
A	EN	
X	0	OPEN
0	1	6 — 7
1	1	6 — 7

0 ; LOW LEVEL
1 ; HIGH LEVEL
X ; DON'T CARE

TL610CP (TI)
MOS ANALOG SWITCH
— TOP VIEW —

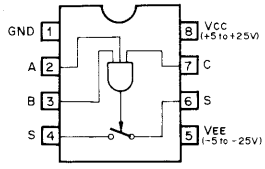

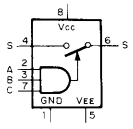

CONT IN			S
A	B	C	
0	X	X	OFF(OPEN)
X	0	X	OFF(OPEN)
X	X	0	OFF(OPEN)
1	1	1	ON(CLOSED)

0 ; LOW LEVEL
1 ; HIGH LEVEL
X ; DON'T CARE

uPC4557C (NEC)
OPERATIONAL AMPLIFIER (WIDE BAND, LOW NOISE)
— TOP VIEW —

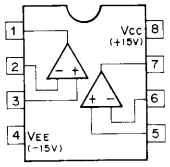

TL721CP (TI)
HIGH SPEED COMPARATOR (ECL OUTPUT)
— TOP VIEW —

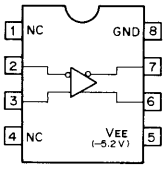

VDAC1852N (INTECH)
CMOS 8-BIT VIDEO D/A CONVERTER
— TOP VIEW —

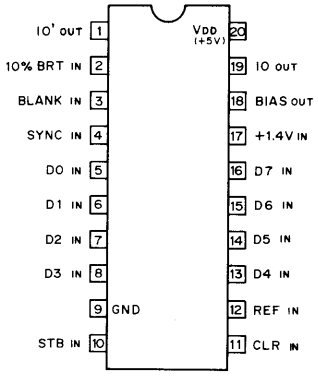

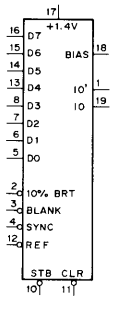

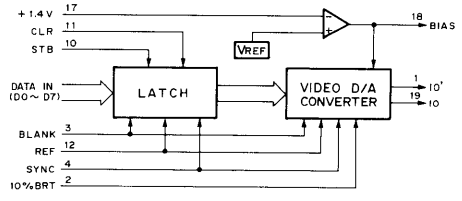

SECTION D
REPLACEABLE PARTS AND OPTIONAL FIXTURE

補修用部品注意事項

(1) 安全重要部品

回路図，分解図，電気部品表中，⚠ 印及び ▒ で囲まれた部品は安全性を維持するために重要な部品です。従ってこれらの部品を交換するときには必ず指定の部品と交換して下さい。

(2) 部品の共通化

ソニーから供給される部品はセットに実装されているものと異なることがあります。これは部品の共通化，改良等によるものです。
分解図や電気部品表には現時点での共通化された部品が記載されています。

(3) 部品の在庫

部品表のSP (Supply code) 欄にoで示される部品は交換頻度が低い部品ですので在庫していないことがあり，納期が長くなることがあります。

(4) コンデンサー，インダクター，抵抗の単位

回路図，分解図，電気部品表中，特に明記したものを除き，下記の単位は省略されています。

コンデンサー：μF
インダクター：μH
抵抗　　：Ω

Notes on Repair Parts

(1) Safety Related Components Warning

Components identified by shading marked with ⚠ on the schematic diagrams, exploded views and electrical spare parts list are critical to safe operation. Replace these components with Sony parts whose part numbers appear in this manual or in service bulletins and service manual supplements published by Sony.

(2) Standardization of Parts

Repair parts supplied from Sony Parts Center may not be always identical with the parts which actually in use due to "accommodating the improved parts and/or engineering changes" or "standardization of genuine parts".
This manual's exploded views and electrical spare parts list are indicating the part numbers of "the standardized genuine parts at present".

(3) Stock of Parts

Parts marked with "o" SP (Supply Code) column of the spare parts list are not normally required for routine service work. Orders for parts marked with "o" will be processed, but allow for additional delivery time.

(4) Units for Capacitors, Inductors and Resistors

The following units are assumed in schematic diagrams, electrical parts list and exploded views unless otherwise specified.

Capacitors: μF
Inductors: μH
Resistors: ohm

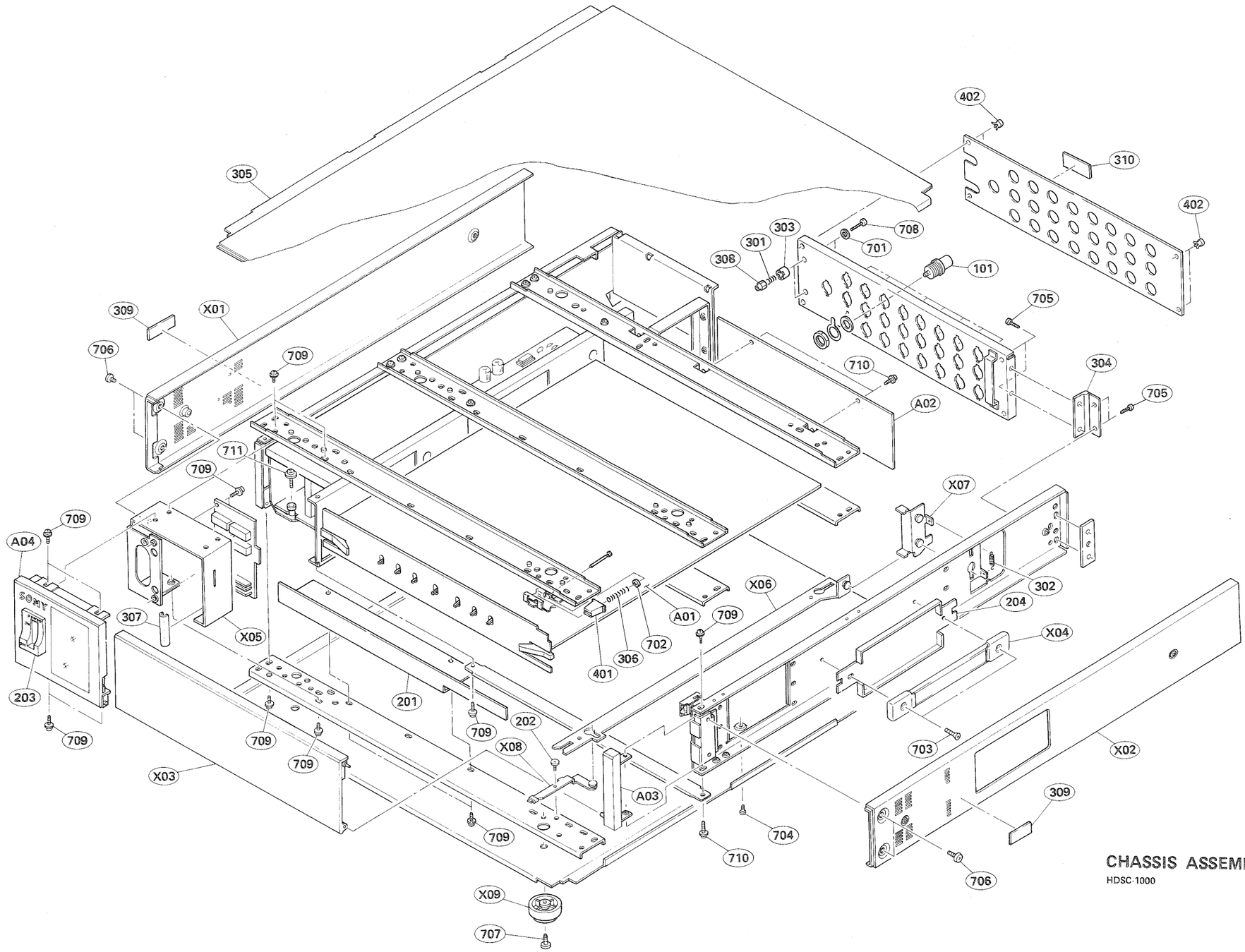

CHASSIS ASSEMBLY

HDSC-1000

CHASSIS ASSEMBLY, HDSC-1000

No.	Part No.	SP	Description
A01	A-6257-188-A	o	MOUNTED CIRCUIT BOARD, SG-138
A02	A-6265-087-A	o	MOUNTED CIRCUIT BOARD, MB-201
A03	A-6273-187-A	o	PROTECTOR ASSY
A04	A-6273-188-A	o	PANEL ASSY, INDICATION
X01	X-2118-903-1	o	PANEL (LEFT) ASSY, SIDE
X02	X-2118-904-1	o	PANEL (RIGHT) ASSY, SIDE
X03	X-2127-903-1	o	PANEL ASSY, FRONT
X04	X-2275-501-0	s	HANDLE ASSY
X05	X-3673-201-2	o	BRACKET ASSY, PANEL
X06	X-3673-202-0	o	PLATE ASSY, STOPPER
X07	X-2127-906-0	o	STOPPER ASSY
X08	X-3673-207-2	o	LEVER ASSY, STOPPER
X09	X-4310-310-0	o	FOOT ASSY
101	1-561-781-21	s	RECEPTACLE, BNC
201	2-127-913-01	o	PANEL, BRANK
202	2-236-956-00	o	SCREW, STEP
203	2-251-642-00	s	GUARD, POWER SWITCH
204	2-252-630-02	o	PLATE, ORNAMENTAL, HANDLE
301	3-303-890-01	o	SPRING, COMPRESSION
302	3-555-121-00	o	SPRING, TENSION
303	3-651-849-00	o	SPACER, PANEL
304	3-658-816-00	o	HINGE, FRONT
305	3-673-268-11	o	LID, UPPER
306	3-673-281-00	o	SPRING, COMPRESSION
307	3-678-515-02	o	EDGING, RUBBER
308	3-680-316-00	s	NUT (M4), STOPPER
309	3-703-082-11	o	LABEL, CAUTION (FOR UC, EK)
310	3-703-082-21	s	LABEL, CAUTION (FOR UC, EK)
401	4-335-962-00	s	PUSH BUTTON
402	4-812-134-11	s	RIVET NYLON, 3.5
701	7-688-004-12	s	W4, MIDDLE
702	7-624-104-04	s	STOP RING 2.0, TYPE-E
703	7-682-264-09	s	SCREW, +K 4×14
704	7-682-545-09	s	SCREW, +B 3×4
705	7-682-546-09	s	SCREW, +B 3×5
706	7-682-560-09	s	SCREW, +B 4×6
707	7-682-563-09	s	SCREW, +B 4×12
708	7-682-566-09	s	SCREW, +B 4×20
709	7-682-647-09	s	SCREW, +PSW 3×6
710	7-682-648-09	s	SCREW, +PSW 3×8
711	7-682-650-09	s	SCREW, +PSW 3×12

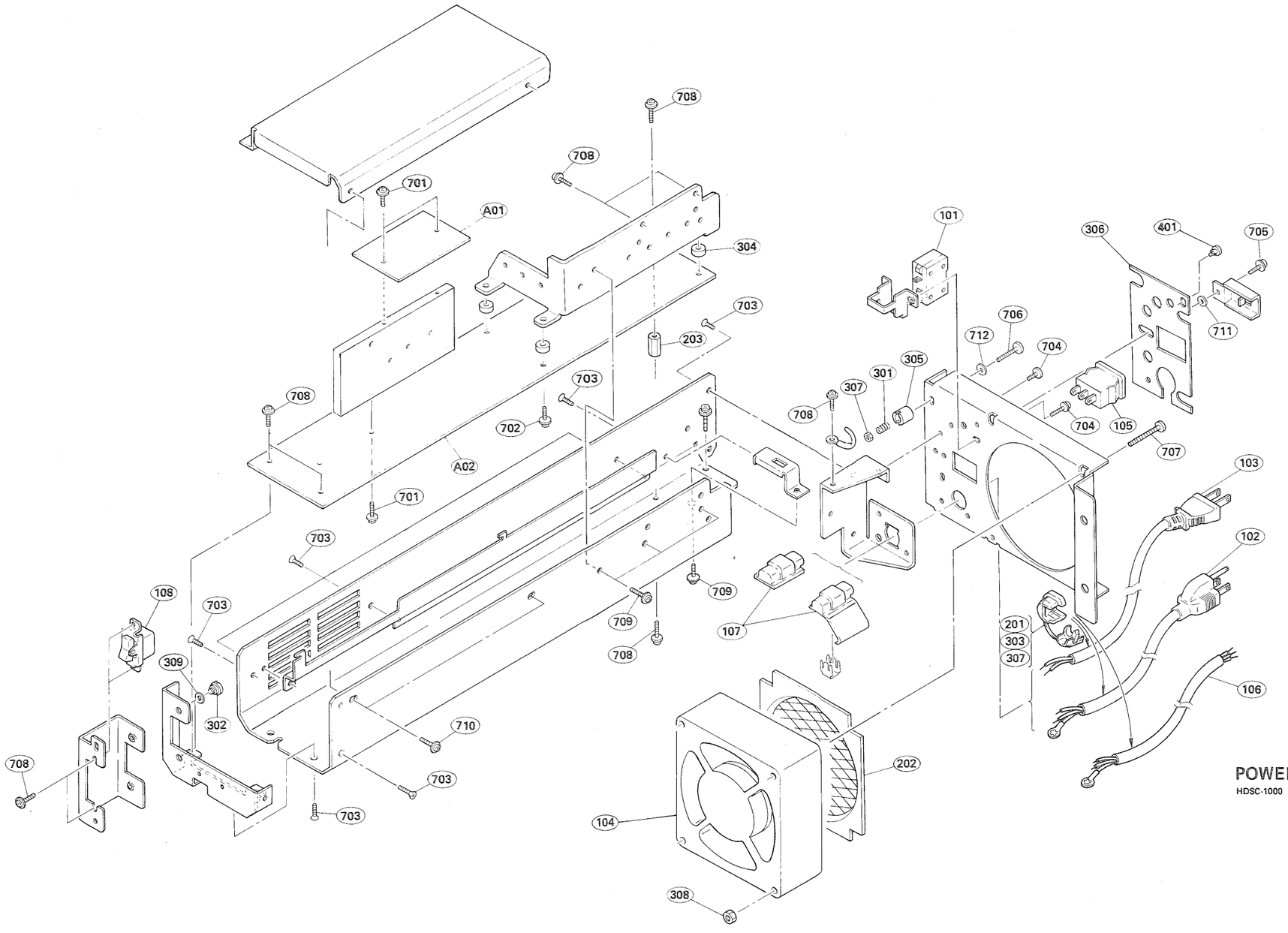

POWER SUPPLY ASSEMBLY
HDSC-1000

POWER SUPPLY ASSEMBLY, HDSC-1000

No.	Part No.	SP	Description
A01	A-6263-037-A	o	MOUNTED CIRCUIT BOARD, CT-29
A02	⚠ A-6263-042-A	o	MOUNTED CIRCUIT BOARD, PW-91A
101	⚠ 1-532-534-31	s	BREAKER, CIRCUIT
102	⚠ 1-534-517-00	s	CORD, POWER (FOR UC)
103	⚠ 1-534-535-14	s	CORD, POWER (FOR J)
104	1-541-170-31	s	FAN, DC
105	⚠ 1-554-011-00	s	SWITCH, ROCKER
106	⚠ 1-556-371-00	s	CORD, POWER (FOR EK)
107	⚠ 1-563-112-11	o	CONNECTOR, DIVERGE
108	⚠ 1-570-117-31	s	SWITCH, SEESAW
201	⚠ 2-234-904-00	o	BUSH, CORD (FOR J)
202	2-252-609-00	o	COVER, FAN
203	2-280-622-11	o	SUPPORT (M3), HEXAGON
301	3-303-890-01	o	SPRING, COMPRESSION
302	3-630-415-00	s	SCREW, STEP, M3
303	⚠ 3-649-728-00	o	STOPPER, CORD (FOR UC)
304	3-650-188-00	s	FLANGE, LOWER
305	3-651-849-00	o	SPACER, PANEL
306	3-673-211-00	o	LABEL, REAR PANEL (RIGHT)
307	⚠ 3-673-298-00	s	STOPPER, CORD (FOR EK)
308	3-680-316-00	s	NUT (M4), STOPPER
309	3-701-443-21	s	WASHER, POLY 5MM DIA., 0.5T
401	4-812-134-11	s	RIVET NYLON, 3.5
701	7-628-254-20	s	SCREW, +PSW 2.6×8
702	7-628-254-30	s	SCREW, +PSW 2.6×10
703	7-682-247-09	s	SCREW, +K 3×6
704	7-682-546-09	s	SCREW, +B 3×5
705	7-682-547-09	s	SCREW, +B 3×6
706	7-682-566-09	s	SCREW, +B 4×20
707	7-682-571-09	s	SCREW, +B 4×45
708	7-682-647-09	s	SCREW, +PSW 3×6
709	7-682-648-09	s	SCREW, +PSW 3×8
710	7-682-903-21	s	SCREW, +PWH 3×8
711	7-688-002-01	s	W2.6
712	7-688-004-12	s	W4, MIDDLE

NONPOLAR CAPCITOR, HDSC−1000

Replacements for nonpolar capacitors not given in board parts lists are shown in the following list. If a capacitor with the desired working voltage is not found, choose one of a higher working voltage.

Part No.	SP	Description	
1−107−019−00	s	CAP, MICA	1.0pF ±0.5pF 500V
1−107−039−00	s	CAP, MICA	1.2pF ±0.5pF 500V
1−107−040−00	s	CAP, MICA	1.5pF ±0.5pF 500V
1−107−041−00	s	CAP, MICA	1.8pF ±0.5pF 500V
1−107−042−00	s	CAP, MICA	2.2pF ±0.5pF 500V
1−107−043−00	s	CAP, MICA	2.7pF ±0.5pF 500V
1−107−044−00	s	CAP, MICA	3.3pF ±0.5pF 500V
1−107−045−00	s	CAP, MICA	3.9pF ±0.5pF 500V
1−107−046−00	s	CAP, MICA	4.7pF ±0.5pF 500V
1−107−026−00	s	CAP, MICA	5.1pF ±0.5pF 500V
1−107−047−00	s	CAP, MICA	5.6pF ±0.5pF 500V
1−107−048−00	s	CAP, MICA	6.8pF ±0.5pF 500V
1−107−049−00	s	CAP, MICA	8.2pF ±0.5pF 500V
1−107−202−00	s	CAP, MICA	10pF 5% 500V
1−107−203−00	s	CAP, MICA	11pF 5% 500V
1−107−204−00	s	CAP, MICA	12pF 5% 500V
1−107−205−00	s	CAP, MICA	13pF 5% 500V
1−107−206−00	s	CAP, MICA	15pF 5% 500V
1−107−207−00	s	CAP, MICA	16pF 5% 500V
1−107−208−00	s	CAP, MICA	18pF 5% 500V
1−107−209−00	s	CAP, MICA	20pF 5% 500V
1−107−210−00	s	CAP, MICA	22pF 5% 500V
1−107−211−00	s	CAP, MICA	24pF 5% 500V
1−107−157−00	s	CAP, MICA	27pF 5% 500V
1−107−158−00	s	CAP, MICA	30pF 5% 500V
1−107−159−00	s	CAP, MICA	33pF 5% 500V
1−107−074−00	s	CAP, MICA	36pF 5% 50V
1−107−075−00	s	CAP, MICA	39pF 5% 50V
1−107−076−00	s	CAP, MICA	43pF 5% 50V
1−107−077−00	s	CAP, MICA	47pF 5% 50V
1−107−164−00	s	CAP, MICA	51pF 5% 500V
1−107−165−00	s	CAP, MICA	56pF 5% 500V
1−107−166−00	s	CAP, MICA	62pF 5% 500V
1−107−036−00	s	CAP, MICA	68pF 5% 500V
1−107−167−00	s	CAP, MICA	75pF 5% 500V
1−107−083−00	s	CAP, MICA	82pF 5% 50V
1−107−084−00	s	CAP, MICA	91pF 5% 50V
1−107−085−00	s	CAP, MICA	100pF 5% 50V
1−107−086−00	s	CAP, MICA	110pF 5% 50V
1−107−087−00	s	CAP, MICA	120pF 5% 50V
1−109−538−00	s	CAP, MICA	130pF 5% 100V
1−109−539−00	s	CAP, MICA	150pF 5% 100V
1−107−090−00	s	CAP, MICA	160pF 5% 50V
1−109−540−00	s	CAP, MICA	180pF 5% 100V
1−109−541−00	s	CAP, MICA	200pF 5% 100V
1−109−542−00	s	CAP, MICA	220pF 5% 100V
1−109−545−00	s	CAP, MICA	270pF 5% 100V
1−109−547−00	s	CAP, MICA	330pF 5% 100V
1−109−549−00	s	CAP, MICA	390pF 5% 100V
1−109−633−00	s	CAP, MICA	470pF 2% 500V
1−109−555−00	s	CAP, MICA	560pF 5% 100V
1−109−635−00	s	CAP, MICA	470pF 2% 500V
1−161−883−11	s	CAP, CERAMIC	0.0015 50V
1−161−884−11	s	CAP, CERAMIC	0.0022 50V
1−161−885−11	s	CAP, CERAMIC	0.0033 50V
1−161−886−11	s	CAP, CERAMIC	0.0047 50V
1−161−887−11	s	CAP, CERAMIC	0.0068 50V
1−161−888−11	s	CAP, CERAMIC	0.01 50V
1−161−889−11	s	CAP, CERAMIC	0.015 50V
1−161−890−11	s	CAP, CERAMIC	0.022 50V
1−161−891−11	s	CAP, CERAMIC	0.033 50V
1−161−892−11	s	CAP, CERAMIC	0.047 50V
1−161−893−11	s	CAP, CERAMIC	0.068 50V
1−161−485−00	s	CAP, CERAMIC	0.1 50V
1−161−895−11	s	CAP, CERAMIC	0.15 50V
1−161−896−11	s	CAP, CERAMIC	0.22 50V
1−161−897−11	s	CAP, CERAMIC	0.33 50V
1−161−898−11	s	CAP, CERAMIC	0.47 50V
1−161−899−11	s	CAP, CERAMIC	0.68 50V
1−161−900−11	s	CAP, CERAMIC	1.0 50V

ELECTROLYTIC CAPACITOR, HDSC-1000

Replacement for electrolytic capacitors not given in board parts lists are shown in the following list. If a capacitor with the desired working voltage is not found, choose one of a higher working voltage.

Part No.	SP	Description	
1−124−902−00	s	CAP, ELECT	0.47 20% 50V
1−124−791−11	s	CAP, ELECT	1.0 20% 100V
1−124−925−11	s	CAP, ELECT	2.2 20% 100V
1−123−382−00	s	CAP, ELECT	3.3 20% 100V
1−124−927−00	s	CAP, ELECT	4.7 20% 100V
1−123−875−91	s	CAP, ELECT	10 20% 50V
1−124−908−11	s	CAP, ELECT	22 20% 50V
1−124−963−11	s	CAP, ELECT	33 20% 16V
1−124−482−11	s	CAP, ELECT	33 20% 35V
1−124−917−11	s	CAP, ELECT	33 20% 63V
1−124−446−11	s	CAP, ELECT	47 20% 10V
1−124−477−11	s	CAP, ELECT	47 20% 25V
1−124−910−11	s	CAP, ELECT	47 20% 50V
1−124−443−00	s	CAP, ELECT	100 20% 10V
1−126−101−11	s	CAP, ELECT	100 20% 16V
1−124−478−11	s	CAP, ELECT	100 20% 25V
1−124−122−11	s	CAP, ELECT	100 20% 50V
1−124−444−00	s	CAP, ELECT	220 20% 10V
1−124−120−11	s	CAP, ELECT	220 20% 25V
1−124−484−11	s	CAP, ELECT	220 20% 35V
1−124−911−11	s	CAP, ELECT	220 20% 50V
1−124−442−00	s	CAP, ELECT	330 20% 6.3V
1−124−604−00	s	CAP, ELECT	330 20% 10V
1−124−119−00	s	CAP, ELECT	330 20% 16V
1−124−479−11	s	CAP, ELECT	330 20% 25V
1−124−485−11	s	CAP, ELECT	330 20% 35V
1−124−912−11	s	CAP, ELECT	330 20% 50V
1−124−472−11	s	CAP, ELECT	470 20% 10V
1−124−475−11	s	CAP, ELECT	470 20% 16V
1−124−480−11	s	CAP, ELECT	470 20% 25V
1−126−104−11	s	CAP, ELECT	470 20% 35V
1−124−913−11	s	CAP, ELECT	470 20% 50V

RESISTOR, HDSC-1000

Replacements for resistors not given in board parts lists are shown in the following list.

Part No.	SP	Description	
1-214-509-00	s	RES, METAL	10 1% 1/8W
1-214-510-00	s	RES, METAL	11 1% 1/8W
1-214-511-00	s	RES, METAL	12 1% 1/8W
1-214-512-00	s	RES, METAL	13 1% 1/8W
1-214-513-00	s	RES, METAL	15 1% 1/8W
1-214-514-00	s	RES, METAL	16 1% 1/8W
1-214-515-00	s	RES, METAL	18 1% 1/8W
1-214-516-00	s	RES, METAL	20 1% 1/8W
1-214-517-00	s	RES, METAL	22 1% 1/8W
1-214-518-00	s	RES, METAL	24 1% 1/8W
1-214-519-00	s	RES, METAL	27 1% 1/8W
1-214-520-00	s	RES, METAL	30 1% 1/8W
1-214-521-00	s	RES, METAL	33 1% 1/8W
1-214-522-00	s	RES, METAL	36 1% 1/8W
1-214-523-00	s	RES, METAL	39 1% 1/8W
1-214-524-00	s	RES, METAL	43 1% 1/8W
1-214-525-00	s	RES, METAL	47 1% 1/8W
1-214-526-00	s	RES, METAL	51 1% 1/8W
1-214-527-00	s	RES, METAL	56 1% 1/8W
1-214-528-00	s	RES, METAL	62 1% 1/8W
1-214-529-00	s	RES, METAL	68 1% 1/8W
1-214-530-00	s	RES, METAL	75 1% 1/8W
1-214-531-00	s	RES, METAL	82 1% 1/8W
1-214-532-00	s	RES, METAL	91 1% 1/8W
1-214-533-00	s	RES, METAL	100 1% 1/8W
1-214-534-00	s	RES, METAL	110 1% 1/8W
1-214-535-00	s	RES, METAL	120 1% 1/8W
1-214-536-00	s	RES, METAL	130 1% 1/8W
1-214-537-00	s	RES, METAL	150 1% 1/8W
1-214-538-00	s	RES, METAL	160 1% 1/8W
1-214-539-00	s	RES, METAL	180 1% 1/8W
1-214-540-00	s	RES, METAL	200 1% 1/8W
1-214-541-00	s	RES, METAL	220 1% 1/8W
1-214-542-00	s	RES, METAL	240 1% 1/8W
1-214-543-00	s	RES, METAL	270 1% 1/8W
1-214-544-00	s	RES, METAL	300 1% 1/8W
1-214-545-00	s	RES, METAL	330 1% 1/8W
1-214-546-00	s	RES, METAL	360 1% 1/8W
1-214-547-00	s	RES, METAL	390 1% 1/8W
1-214-548-00	s	RES, METAL	430 1% 1/8W
1-214-549-00	s	RES, METAL	470 1% 1/8W
1-214-550-00	s	RES, METAL	510 1% 1/8W
1-214-551-00	s	RES, METAL	560 1% 1/8W
1-214-552-00	s	RES, METAL	620 1% 1/8W
1-214-553-00	s	RES, METAL	680 1% 1/8W
1-214-554-00	s	RES, METAL	750 1% 1/8W
1-214-555-00	s	RES, METAL	820 1% 1/8W
1-214-556-00	s	RES, METAL	910 1% 1/8W
1-214-557-00	s	RES, METAL	1.0k 1% 1/8W
1-214-558-00	s	RES, METAL	1.1k 1% 1/8W
1-214-559-00	s	RES, METAL	1.2k 1% 1/8W
1-214-560-00	s	RES, METAL	1.3k 1% 1/8W
1-214-561-00	s	RES, METAL	1.5k 1% 1/8W
1-214-562-00	s	RES, METAL	1.6k 1% 1/8W
1-214-563-00	s	RES, METAL	1.8k 1% 1/8W
1-214-564-00	s	RES, METAL	2.0k 1% 1/8W
1-214-565-00	s	RES, METAL	2.2k 1% 1/8W
1-214-566-00	s	RES, METAL	2.4k 1% 1/8W
1-214-567-00	s	RES, METAL	2.7k 1% 1/8W
1-214-568-00	s	RES, METAL	3.0k 1% 1/8W
1-214-569-00	s	RES, METAL	3.3k 1% 1/8W
1-214-570-00	s	RES, METAL	3.6k 1% 1/8W
1-214-571-00	s	RES, METAL	3.9k 1% 1/8W
1-214-572-00	s	RES, METAL	4.3k 1% 1/8W
1-214-573-00	s	RES, METAL	4.7k 1% 1/8W
1-214-574-00	s	RES, METAL	5.1k 1% 1/8W
1-214-575-00	s	RES, METAL	5.6k 1% 1/8W
1-214-576-00	s	RES, METAL	6.2k 1% 1/8W
1-214-577-00	s	RES, METAL	6.8k 1% 1/8W
1-214-578-00	s	RES, METAL	7.5k 1% 1/8W

(RESISTOR, HDSC-1000)

Replacements for resistors not given in board parts lists are shown in the following list.

Part No.	SP	Description	
1-214-579-00	s	RES, METAL	8.2k 1% 1/8W
1-214-580-00	s	RES, METAL	9.1k 1% 1/8W
1-214-581-00	s	RES, METAL	10k 1% 1/8W
1-214-582-00	s	RES, METAL	11k 1% 1/8W
1-214-583-00	s	RES, METAL	12k 1% 1/8W
1-214-584-00	s	RES, METAL	13k 1% 1/8W
1-214-585-00	s	RES, METAL	15k 1% 1/8W
1-214-586-00	s	RES, METAL	16k 1% 1/8W
1-214-587-00	s	RES, METAL	18k 1% 1/8W
1-214-588-00	s	RES, METAL	20k 1% 1/8W
1-214-589-00	s	RES, METAL	22k 1% 1/8W
1-214-590-00	s	RES, METAL	24k 1% 1/8W
1-214-591-00	s	RES, METAL	27k 1% 1/8W
1-214-592-00	s	RES, METAL	30k 1% 1/8W
1-214-593-00	s	RES, METAL	33k 1% 1/8W
1-215-819-11	s	RES, METAL	36k 1% 1/8W
1-215-820-11	s	RES, METAL	39k 1% 1/8W
1-215-821-11	s	RES, METAL	43k 1% 1/8W
1-215-822-11	s	RES, METAL	47k 1% 1/8W
1-215-823-11	s	RES, METAL	51k 1% 1/8W
1-215-824-11	s	RES, METAL	56k 1% 1/8W
1-215-825-11	s	RES, METAL	62k 1% 1/8W
1-215-826-11	s	RES, METAL	68k 1% 1/8W
1-215-827-11	s	RES, METAL	75k 1% 1/8W
1-215-828-11	s	RES, METAL	82k 1% 1/8W
1-215-829-11	s	RES, METAL	91k 1% 1/8W
1-215-830-11	s	RES, METAL	100k 1% 1/8W
1-215-470-00	s	RES, METAL	110k 1% 1/6W
1-215-471-00	s	RES, METAL	120k 1% 1/6W
1-215-472-00	s	RES, METAL	130k 1% 1/6W
1-215-473-00	s	RES, METAL	150k 1% 1/6W
1-215-474-00	s	RES, METAL	160k 1% 1/6W
1-215-475-00	s	RES, METAL	180k 1% 1/6W
1-215-476-00	s	RES, METAL	200k 1% 1/6W
1-215-477-00	s	RES, METAL	220k 1% 1/6W
1-215-478-00	s	RES, METAL	240k 1% 1/6W
1-215-479-00	s	RES, METAL	270k 1% 1/6W
1-215-480-00	s	RES, METAL	300k 1% 1/6W
1-215-481-00	s	RES, METAL	330k 1% 1/6W
1-215-482-00	s	RES, METAL	360k 1% 1/6W
1-215-483-00	s	RES, METAL	390k 1% 1/6W
1-215-484-00	s	RES, METAL	430k 1% 1/6W
1-215-485-00	s	RES, METAL	470k 1% 1/6W
1-215-486-00	s	RES, METAL	510k 1% 1/6W
1-215-487-00	s	RES, METAL	560k 1% 1/6W
1-215-488-00	s	RES, METAL	620k 1% 1/6W
1-215-489-00	s	RES, METAL	680k 1% 1/6W
1-215-490-00	s	RES, METAL	750k 1% 1/6W
1-215-491-00	s	RES, METAL	820k 1% 1/6W
1-215-492-00	s	RES, METAL	910k 1% 1/6W
1-215-493-00	s	RES, METAL	1.0M 1% 1/6W

CT-29 BOARD, HDSC-1000

Ref. No. or Qty	Part No.	SP	Description
1pc	A-6263-037-A	o	COMPLETE PCB, CT-29
(This assembly includes the follwing parts.)			
C202	1-123-356-00	s	CAP, ELECT 10uF 20% 50V
C204	1-108-570-00	s	CAP, MYLAR 0.0043uF 5% 50V
C205	1-123-330-00	s	CAP, ELECT 22uF 20% 25V
C206	1-130-491-00	s	CAP, MYLAR 0.047uF 5% 50V
C207	1-106-359-00	s	CAP, MYLAR 0.0047uF 5% 50V
C208	1-106-359-00	s	CAP, MYLAR 0.0047uF 5% 50V
C209	1-106-347-00	s	CAP, MYLAR 0.0015uF 5% 50V
C211	1-106-347-00	s	CAP, MYLAR 0.0015uF 5% 50V
C212	1-161-055-00	s	CAP, CERAMIC 0.022uF 10% 50V
CN201	1-508-904-00	s	CONNECTOR (M) 6P
D201	8-719-100-27	s	DIODE RD4.7E-B
IC201	8-759-904-94	s	IC TL494CN
IC202	8-759-145-57	s	IC uPC4557C
Q201	8-729-801-72	s	TRANSISTOR 2SC2603-E
R200	1-247-713-11	s	RES, CARBON 1K 5% 1/4W
R201	1-247-718-11	s	RES, CARBON 2.7K 5% 1/4W
R202	1-249-463-11	s	RES, CARBON 27K 5% 1/4W
R203	1-247-164-00	s	RES, CARBON 24K 5% 1/4W
R204	1-247-164-00	s	RES, CARBON 24K 5% 1/4W
R205	1-249-459-11	s	RES, CARBON 12K 5% 1/4W
R206	1-247-154-00	s	RES, CARBON 9.1K 5% 1/4W
R207	1-247-721-11	s	RES, CARBON 4.7K 5% 1/4W
R208	1-247-718-11	s	RES, CARBON 2.7K 5% 1/4W
R209	1-215-491-00	s	RES, CARBON 820K 5% 1/4W
R210	1-215-491-00	s	RES, CARBON 820K 5% 1/4W
R211	1-247-718-11	s	RES, CARBON 2.7K 5% 1/4W
R212	1-247-688-11	s	RES, CARBON 10 5% 1/4W
R213	1-249-460-11	s	RES, CARBON 15K 5% 1/4W
R214	1-247-164-00	s	RES, CARBON 24K 5% 1/4W
R215	1-247-164-00	s	RES, CARBON 24K 5% 1/4W
R216	1-249-460-11	s	RES, CARBON 15K 5% 1/4W
R217	1-247-164-00	s	RES, CARBON 24K 5% 1/4W
R218	1-247-164-00	s	RES, CARBON 24K 5% 1/4W
R219	1-247-122-00	s	RES, CARBON 430 5% 1/4W
R220	1-247-713-11	s	RES, CARBON 1K 5% 1/4W
R221	1-247-152-00	s	RES, CARBON 7.5K 5% 1/4W
R222	1-247-713-11	s	RES, CARBON 1K 5% 1/4W
RV201	1-226-022-00	s	RES, ADJ, METAL FILM 2K
RV202	1-226-023-00	s	RES, ADJ, METAL FILM 5K

DP-88 BOARD, HDSC-1000

Ref. No. or Qty	Part No.	SP	Description
CN5	1-564-855-11	o	PIN, CONNECTOR 15P
D1	8-719-928-50	s	LED LT9002N, GREEN
D2	8-719-928-50	s	LED LT9002N, GREEN
D3	8-719-928-50	s	LED LT9002N, GREEN
D4	8-719-928-50	s	LED LT9002N, GREEN
D5	8-719-949-36	s	LED LT9230H, YELLOW
D6	8-719-949-36	s	LED LT9230H, YELLOW
D7	8-719-949-36	s	LED LT9230H, YELLOW
D8	8-719-928-50	s	LED LT9002N, GREEN
D9	8-719-928-50	s	LED LT9002N, GREEN
D10	8-719-928-50	s	LED LT9002N, GREEN
D11	8-719-928-50	s	LED LT9002N, GREEN
D12	8-719-949-36	s	LED LT9230H, YELLOW
D13	8-719-949-36	s	LED LT9230H, YELLOW
D14	8-719-949-36	s	LED LT9230H, YELLOW
D15	8-719-949-36	s	LED LT9230H, YELLOW
IC1	8-759-974-06	s	IC SN7406N
IC2	8-759-974-06	s	IC SN7406N
IC3	8-759-974-07	s	IC SN7407N
R1	1-214-120-00	s	RES, METAL 330 1% 1/4W
R2	1-214-120-00	s	RES, METAL 330 1% 1/4W
R3	1-214-120-00	s	RES, METAL 330 1% 1/4W
R4	1-214-120-00	s	RES, METAL 330 1% 1/4W
R5	1-214-120-00	s	RES, METAL 330 1% 1/4W
R6	1-214-120-00	s	RES, METAL 330 1% 1/4W
R7	1-214-120-00	s	RES, METAL 330 1% 1/4W
R8	1-214-120-00	s	RES, METAL 330 1% 1/4W
R9	1-214-120-00	s	RES, METAL 330 1% 1/4W
R10	1-214-120-00	s	RES, METAL 330 1% 1/4W
R11	1-214-120-00	s	RES, METAL 330 1% 1/4W

NOTE: Please see pages D-7 and D-8 for the part numbers of capacitors and resistors that are not listed in the parts list.

MB-201 BOARD, HDSC-10000

Ref. No. or Qty	Part No.	SP	Description
1pc	A-6265-087-A	o	COMPLETE PCB, MB-201
(This assembly includes the following parts.)			
1pc	7-621-259-52	s	SCREW +P 2.6X8
1pc	7-622-207-05	s	N 2.6, TYPE 2
1pc	7-623-207-22	s	SW 2.6, TYPE 2
1pc	7-688-002-01	s	W 2.6, MIDDLE
C1	1-124-522-11	s	CAP, ELECT 270uF 20% 16V
C2	1-124-522-11	s	CAP, ELECT 270uF 20% 16V
C3	1-124-522-11	s	CAP, ELECT 270uF 20% 16V
C4	1-124-522-11	s	CAP, ELECT 270uF 20% 16V
C5	1-124-518-11	s	CAP, ELECT 470uF 20% 6.3V
C6	1-124-518-11	s	CAP, ELECT 470uF 20% 6.3V
C7	1-124-518-11	s	CAP, ELECT 470uF 20% 6.3V
C8	1-124-518-11	s	CAP, ELECT 470uF 20% 6.3V
CN2	1-564-877-11	o	PIN, CONNECTOR 15P
CN3	1-508-709-00	o	PIN, CONNECTOR 5P
CN4	1-508-708-00	s	PIN, CONNECTOR (WTH LOCK) 4P
CN11	1-561-365-21	s	CONNECTOR, RF, MALE
CN12	1-561-365-21	s	CONNECTOR, RF, MALE
CN13	1-561-365-21	s	CONNECTOR, RF, MALE
CN14	1-561-365-21	s	CONNECTOR, RF, MALE
CN15	1-561-365-21	s	CONNECTOR, RF, MALE
CN16	1-561-365-21	s	CONNECTOR, RF, MALE
CN17	1-561-365-21	s	CONNECTOR, RF, MALE
CN18	1-561-365-21	s	CONNECTOR, RF, MALE
CN19	1-561-365-21	s	CONNECTOR, RF, MALE
CN20	1-561-365-21	s	CONNECTOR, RF, MALE
CN21	1-561-365-21	s	CONNECTOR, RF, MALE
CN22	1-561-365-21	s	CONNECTOR, RF, MALE
CN31	1-561-365-21	s	CONNECTOR, RF, MALE
CN32	1-561-365-21	s	CONNECTOR, RF, MALE
CN33	1-561-365-21	s	CONNECTOR, RF, MALE
CN34	1-561-365-21	s	CONNECTOR, RF, MALE
CN35	1-561-365-21	s	CONNECTOR, RF, MALE
CN36	1-561-365-21	s	CONNECTOR, RF, MALE
CN37	1-561-365-21	s	CONNECTOR, RF, MALE
CN38	1-561-365-21	s	CONNECTOR, RF, MALE
CN39	1-561-365-21	s	CONNECTOR, RF, MALE
CN40	1-561-365-21	s	CONNECTOR, RF, MALE
CN41	1-561-365-21	s	CONNECTOR, RF, MALE
CN42	1-561-365-21	s	CONNECTOR, RF, MALE
CN43	1-561-365-21	s	CONNECTOR, RF, MALE

PW-91A BOARD, HDSC-1000

Ref. No. or Qty	Part No.	SP	Description
1pc	⚠ A-6263-042-A	o	COMPLETE PCB, PW-91A
(This assembly includes the following parts.)			
1pc	1-535-100-00	o	TERMINAL, SOLDERLESS
1pc	1-535-324-00	o	TERMINAL, FASTEN
1pc	2-832-007-00	s	BUSHING (K), INSULATING
1pc	3-650-188-00	s	FLANGE, LOWER
1pc	7-628-254-20	s	+PSW, 2.6X8
1pc	7-628-254-30	s	SCREW, +PS 2.6X10
1pc	7-682-647-09	s	SCREW +PS 3X6
1pc	7-682-649-09	s	SCREW +PSW 3X10
1pc	7-682-661-09	s	SCREW +PSW 4X8
C1	⚠ 1-136-212-12	s	CAP, FILM 0.1uF 20% 250V
C2	⚠ 1-136-210-00	s	CAP, FILM 0.01uF 20% 250V
C3	⚠ 1-130-854-00	s	CAP, FILM 0.0022uF 20% 250V
C4	⚠ 1-130-854-00	s	CAP, FILM 0.0022uF 20% 250V
C5	⚠ 1-130-854-00	s	CAP, FILM 0.0022uF 20% 250V
C6	⚠ 1-130-854-00	s	CAP, FILM 0.0022uF 20% 250V
C7	1-125-282-00	s	CAP, ELECT 470uF 200V
C8	1-125-282-00	s	CAP, ELECT 470uF 200V
C9	1-123-981-00	s	CAP, ELECT 4.7uF 20% 450V
C10	1-123-984-00	s	CAP, ELECT 4.7uF 20% 250V
C11	1-123-984-00	s	CAP, ELECT 4.7uF 20% 250V
C12	1-161-740-00	s	CAP, CERAMIC 470PF 10% 400V
C14	1-131-356-00	s	CAP, TANT 3.3uF 10% 25V
C16	1-131-356-00	s	CAP, TANT 3.3uF 10% 25V
C17	1-106-355-12	s	CAP, MYLAR 0.0033uF 5% 50V
C18	1-124-971-11	s	CAP, ELECT 3.3uF 20% 63V
C51	1-130-483-00	s	CAP, MYLAR 0.01uF 5% 50V
C52	1-130-483-00	s	CAP, MYLAR 0.01uF 5% 50V
C53	1-130-483-00	s	CAP, MYLAR 0.01uF 5% 50V
C54	1-130-483-00	s	CAP, MYLAR 0.01uF 5% 50V
C55	1-124-599-00	s	CAP, ELECT 220uF 20% 25V
C56	1-126-103-11	s	CAP, ELECT 470uF 20% 16V
C57	1-126-103-11	s	CAP, ELECT 470uF 20% 16V
C58	1-124-599-00	s	CAP, ELECT 220uF 20% 25V
C59	1-124-599-00	s	CAP, ELECT 220uF 20% 25V
C60	1-124-599-00	s	CAP, ELECT 220uF 20% 25V
C61	1-124-599-00	s	CAP, ELECT 220uF 20% 25V
C62	1-124-599-00	s	CAP, ELECT 220uF 20% 25V
C63	1-124-599-00	s	CAP, ELECT 220uF 20% 25V
C71	1-107-167-00	s	CAP, MICA 75PF 5% 50V
C91	1-107-167-00	s	CAP, MICA 75PF 5% 50V
C111	1-107-167-00	s	CAP, MICA 75PF 5% 50V
C131	1-107-167-00	s	CAP, MICA 75PF 5% 50V
CN1	⚠ 1-560-176-00	o	CONNECTOR 2P
CN2	⚠ 1-560-723-00	o	CONNECTOR, PC BOARD 3P
CN3	⚠ 1-508-904-00	s	CONNECTOR (M) 6P
CN4	1-509-705-00	o	SOCKET, CONNECTOR
CN5	1-509-585-00	o	CONNECTOR SOCKET
CN51	1-508-900-00	s	CONNECTOR (M) 2P
D1	8-719-902-17	s	DIODE U15G
D2	8-719-902-17	s	DIODE U15G
D3	8-719-902-17	s	DIODE U15G
D4	8-719-902-17	s	DIODE U15G
D5	8-719-815-55	s	DIODE 1S1555
D6	8-719-200-02	s	DIODE 10E-2
D7	8-719-100-71	s	DIODE RD15E-B
D8	8-719-901-17	s	DIODE V11L
D9	8-719-901-17	s	DIODE V11L
D10	8-719-923-48	s	DIODE 1S2348H
D11	8-719-923-48	s	DIODE 1S2348H
D12	8-719-100-65	s	DIODE RD12E-B
D13	8-719-923-48	s	DIODE 1S2348H
D14	8-719-923-48	s	DIODE 1S2348H
D15	8-719-100-65	s	DIODE RD12E-B
D16	8-719-200-02	s	DIODE 10E-2
D17	8-719-924-06	s	DIODE ERC24-06S
D18	8-719-924-06	s	DIODE ERC24-06S
D51	8-719-901-18	s	DIODE ESAD83-004
D52	8-719-912-50	s	DIODE ESAC25-02N
D53	8-719-912-51	s	DIODE ESAC25-04C
D54	8-719-912-50	s	DIODE ESAC25-02N
D71	8-719-102-52	s	DIODE 1SZ52
D72	8-719-100-21	s	DIODE RD3.9E-B
D73	8-719-815-55	s	DIODE 1S1555
D74	8-719-815-55	s	DIODE 1S1555
D91	8-719-815-55	s	DIODE 1S1555

NOTE: Please see pages D-7 and D-8 for the part numbers of capacitors and resistors that are not listed in the parts list.

(PW-91A BOARD, HDSC-1000)

Ref. No. or Qty	Part No.	SP	Description
D92	8-719-815-55	s	DIODE 1S1555
D93	8-719-100-21	s	DIODE RD3.9E-B
D111	8-719-815-55	s	DIODE 1S1555
D112	8-719-100-21	s	DIODE RD3.9E-B
D113	8-719-815-55	s	DIODE 1S1555
D131	8-719-100-21	s	DIODE RD3.9E-B
D132	8-719-815-55	s	DIODE 1S1555
D133	8-719-815-55	s	DIODE 1S1555
D134	8-719-102-52	s	DIODE 1SZ52
IC71	8-759-132-40	s	IC uPC324C
IC111	8-759-132-40	s	IC uPC324C
L1	⚠ 1-421-329-00	s	COIL, CHOKE
L2	⚠ 1-421-329-00	s	COIL, CHOKE
L3	1-408-654-00	s	INDUCTOR 1mH
L51	1-413-089-00	s	COIL, SN
L52	1-413-090-00	s	COIL, SN
L53	1-413-090-00	s	COIL, SN
L54	1-413-091-00	s	COIL, SN
L55	⚠ 1-421-329-00	s	COIL, CHOKE
L56	1-421-459-00	s	COIL, CHOKE
L57	⚠ 1-421-329-00	s	COIL, CHOKE
L58	⚠ 1-421-329-00	s	COIL, CHOKE
L59	⚠ 1-421-329-00	s	COIL, CHOKE
Q1	8-729-204-88	s	TRANSISTOR 2SC3310
Q2	8-729-962-53	s	TRANSISTOR 2SC2625-C
Q3	8-729-962-53	s	TRANSISTOR 2SC2625-C
Q71	8-729-900-07	s	TRANSISTOR 2SB757
Q72	8-729-177-33	s	TRANSISTOR 2SD773-4
Q73	8-729-105-72	s	TRANSISTOR 2SK523-L1
Q91	8-729-900-07	s	TRANSISTOR 2SB757
Q92	8-729-177-33	s	TRANSISTOR 2SD773-4
Q111	8-729-984-70	s	TRANSISTOR 2SD847
Q112	8-729-113-32	s	TRANSISTOR 2SB733-3
Q131	8-729-984-70	s	TRANSISTOR 2SD847
Q132	8-729-113-32	s	TRANSISTOR 2SB733-3
Q133	8-729-105-72	s	TRANSISTOR 2SK523-L1
R1	⚠ 1-205-739-00	s	RES, WIREWOUND 8.2 10% 5W
R2	⚠ 1-217-623-00	s	RES, FUSIBLE 3K 5% 2W
R5	1-247-765-11	s	RES, CARBON 33K 5% 1/2W
R6	1-214-109-00	s	RES, METAL 110 1% 1/4W
R7	1-207-637-00	s	RES, METAL 150 5% 3W
R8	1-247-090-00	s	RES, CARBON 20 5% 1/4W
R9	1-217-621-00	s	RES, METAL 0.1 10% 2W
R11	1-214-828-00	s	RES, METAL 33 1% 1/2W
R12	1-247-090-00	s	RES, CARBON 20 5% 1/4W
R13	1-214-828-00	s	RES, METAL 33 1% 1/2W
R14	1-214-100-00	s	RES, METAL 47 1% 1/4W
R15	1-214-914-00	s	RES, METAL 110K 1% 1/2W
R16	1-214-914-00	s	RES, METAL 110K 1% 1/2W
R17	1-214-914-00	s	RES, METAL 110K 1% 1/2W
R18	1-214-914-00	s	RES, METAL 110K 1% 1/2W
R19	1-214-920-00	s	RES, CARBON 200K 5% 1/2W
R20	1-214-920-00	s	RES, CARBON 200K 5% 1/2W
R21	1-212-498-00	s	RES, METAL 36 1% 1/2W
R22	1-212-498-00	s	RES, METAL 36 1% 1/2W
R51	1-247-688-11	s	RES, CARBON 10 5% 1/4W
R52	1-247-688-11	s	RES, CARBON 10 5% 1/4W
R53	1-247-688-11	s	RES, CARBON 10 5% 1/4W
R54	1-247-688-11	s	RES, CARBON 10 5% 1/4W
R55	⚠ 1-207-679-00	s	RES, WIREWOUND 15 10% 5W
R71	1-214-132-00	s	RES, METAL 1K 1% 1/4W
R72	1-217-621-00	s	RES, METAL 0.1 10% 2W
R73	1-217-621-00	s	RES, METAL 0.1 10% 2W
R74	1-247-711-11	s	RES, CARBON 680 5% 1/4W
R75	1-214-115-00	s	RES, METAL 200 1% 1/4W
R76	1-214-122-00	s	RES, METAL 390 1% 1/4W
R77	1-214-084-00	s	RES, METAL 10 1% 1/4W
R78	1-214-135-00	s	RES, METAL 1.3K 1% 1/4W
R79	1-214-158-00	s	RES, METAL 12K 1 1/4W
R80	1-214-164-00	s	RES, METAL 22K 1% 1/4W
R81	1-215-479-00	s	RES, CARBON 270K 5% 1/4W
R82	1-214-101-00	s	RES, METAL 51 1% 1/4W
R83	1-214-101-00	s	RES, METAL 51 1% 1/4W
R84	1-214-144-00	s	RES, METAL 3.3K 1% 1/4W
R86	1-214-141-00	s	RES, METAL 2.4K 1% 1/4W

(PW-91A BOARD, HDSC-1000)

Ref. No. or Qty	Part No.	SP	Description
R87	1-214-141-00	s	RES, METAL 2.4K 1% 1/4W
R88	1-214-143-00	s	RES, METAL 3K 1% 1/4W
R89	1-214-161-00	s	RES, METAL 16K 1% 1/4W
R91	1-217-621-00	s	RES, METAL 0.1 10% 2W
R92	1-247-711-11	s	RES, CARBON 680 5% 1/4W
R93	1-214-115-00	s	RES, METAL 200 1% 1/4W
R94	1-214-139-00	s	RES, METAL 2K 1% 1/4W
R95	1-214-140-00	s	RES, METAL 2.2K 1% 1/4W
R96	1-214-108-00	s	RES, METAL 100 1% 1/4W
R97	1-247-887-00	s	RES, CARBON 220K 5% 1/4W
R98	1-214-101-00	s	RES, METAL 51 1% 1/4W
R99	1-214-144-00	s	RES, METAL 3.3K 1% 1/4W
R100	1-214-140-00	s	RES, METAL 2.2K 1% 1/4W
R101	1-214-140-00	s	RES, METAL 2.2K 1% 1/4W
R102	1-215-479-00	s	RES, CARBON 270K 5% 1/4W
R103	1-214-150-00	s	RES, METAL 5.6K 1% 1/4W
R104	1-214-141-00	s	RES, METAL 2.4K 1% 1/4W
R105	1-214-161-00	s	RES, METAL 16K 1% 1/4W
R106	1-214-149-00	s	RES, METAL 5.1K 1% 1/4W
R111	1-217-621-00	s	RES, METAL 0.1 10% 2W
R112	1-247-711-11	s	RES, CARBON 680 5% 1/4W
R113	1-214-115-00	s	RES, METAL 200 1% 1/4W
R115	1-214-116-00	s	RES, METAL 220 1% 1/4W
R116	1-214-113-00	s	RES, METAL 160 1% 1/4W
R117	1-214-108-00	s	RES, METAL 100 1% 1/4W
R118	1-214-161-00	s	RES, METAL 16K 1% 1/4W
R119	1-214-108-00	s	RES, METAL 100 1% 1/4W
R120	1-214-144-00	s	RES, METAL 3.3K 1% 1/4W
R121	1-214-152-00	s	RES, METAL 6.8K 1% 1/4W
R122	1-215-479-00	s	RES, CARBON 270K 5% 1/4W
R123	1-214-132-00	s	RES, METAL 1K 1% 1/4W
R124	1-214-141-00	s	RES, METAL 2.4K 1% 1/4W
R131	1-217-621-00	s	RES, METAL 0.1 10% 2W
R132	1-247-711-11	s	RES, CARBON 680 5% 1/4W
R133	1-214-115-00	s	RES, METAL 200 1% 1/4W
R134	1-214-139-00	s	RES, METAL 2K 1% 1/4W
R135	1-214-108-00	s	RES, METAL 100 1% 1/4W
R136	1-247-887-00	s	RES, CARBON 220K 5% 1/4W
R137	1-214-140-00	s	RES, METAL 2.2K 1% 1/4W
R138	1-214-101-00	s	RES, METAL 51 1% 1/4W
R139	1-214-150-00	s	RES, METAL 5.6K 1% 1/4W
R140	1-214-140-00	s	RES, METAL 2.2K 1% 1/4W
R141	1-214-140-00	s	RES, METAL 2.2K 1% 1/4W
R142	1-215-479-00	s	RES, CARBON 270K 5% 1/4W
R143	1-214-144-00	s	RES, METAL 3.3K 1% 1/4W
R144	1-214-149-00	s	RES, METAL 5.1K 1% 1/4W
R145	1-214-141-00	s	RES, METAL 2.4K 1% 1/4W
R147	1-214-161-00	s	RES, METAL 16K 1% 1/4W
R151	1-214-161-00	s	RES, METAL 16K 1% 1/4W
R154	1-214-125-00	s	RES, METAL 510 1% 1/4W
R155	1-214-143-00	s	RES, METAL 3K 1% 1/4W
RV71	1-224-936-00	s	RES, ADJ, CERMET 500
RV72	1-224-938-00	s	RES, ADJ, CERMET 2K
RV91	1-224-936-00	s	RES, ADJ, CERMET 500
RV92	1-224-938-00	s	RES, ADJ, CERMET 2K
RV111	1-224-936-00	s	RES, ADJ, CERMET 500
RV131	1-224-936-00	s	RES, ADJ, CERMET 500
RV132	1-224-938-00	s	RES, ADJ, CERMET 2K
RV151	1-224-938-00	s	RES, ADJ, CERMET 2K
RY1	⚠ 1-515-451-21	s	RELAY
SW3	⚠ 1-554-058-21	s	SWITCH, THERMAL REED 70°C
T1	⚠ 1-421-430-00	s	FILTER, LINE
T2	1-437-109-00	s	TRANSFORMER, DRIVE
T3	1-437-109-00	s	TRANSFORMER, DRIVE
T4	⚠ 1-447-229-00	s	TRANSFORMER, CONVERTER
TP1	3-657-235-00	o	POINT, TEST
TP2	3-657-235-00	o	POINT, TEST
TP3	3-657-235-00	o	POINT, TEST
ZT1	1-806-356-00	s	VARISTOR ENB461-10A

NOTE: Please see pages D-7 and D-8 for the part numbers of capacitors and resistors that are not listed in the parts list.

SG-138 BOARD, HDSC-1000

Ref. No. or Qty	Part No.	SP	Description
1pc	A-6257-188-A	o	COMPLETE PCB, SG-138
(This assembly includes the following parts.)			
2pcs	3-673-249-00	o	LEVER, PC BOARD
6pc	7-621-759-35	s	SCREW +PSW2.6x5
2pcs	7-626-320-11	o	PIN, SPRING 3X8
11pcs	7-628-254-10	s	+PSW, 2.6X6
C5	1-124-565-00	s	CAP, ELECT 56uF 20% 6.3V
C6	1-130-471-00	s	CAP, MYLAR 0.001uF 5% 50V
C11	1-162-880-11	s	CAP, CERAMIC 120PF 5% 50V
C15	1-162-887-11	s	CAP, CERAMIC 270PF 5% 50V
C19	1-124-518-11	s	CAP, ELECT 470uF 20% 6.3V
C20	1-124-587-11	s	CAP, ELECT 220uF 20% 6.3V
C22	1-124-518-11	s	CAP, ELECT 470uF 20% 6.3V
C23	1-124-587-11	s	CAP, ELECT 220uF 20% 6.3V
C24	1-124-578-11	s	CAP, ELECT 120uF 20% 16V
C25	1-124-578-11	s	CAP, ELECT 120uF 20% 16V
C27	1-124-522-11	s	CAP, ELECT 270uF 20% 16V
C29	1-124-522-11	s	CAP, ELECT 270uF 20% 16V
C104	1-124-583-11	s	CAP, ELECT 22uF 20% 22V
C106	1-124-583-11	s	CAP, ELECT 22uF 20% 22V
C109	1-124-583-11	s	CAP, ELECT 22uF 20% 22V
C111	1-124-583-11	s	CAP, ELECT 22uF 20% 22V
C118	1-124-583-11	s	CAP, ELECT 22uF 20% 22V
C120	1-162-879-11	s	CAP, CERAMIC 100PF 5% 50V
C123	1-162-879-11	s	CAP, CERAMIC 100PF 5% 50V
C127	1-130-482-00	s	CAP, MYLAR 0.0082uF 5% 50V
C135	1-124-583-11	s	CAP, ELECT 22uF 20% 22V
C139	1-130-482-00	s	CAP, MYLAR 0.0082uF 5% 50V
C140	1-162-763-21	s	CAP, CERAMIC 680PF 5% 50V
C144	1-124-583-11	s	CAP, ELECT 22uF 20% 22V
C147	1-162-761-11	s	CAP, CERAMIC 470PF 5% 50V
C151	1-130-474-00	s	CAP, MYLAR 0.0018uF 5% 50V
C152	1-130-475-00	s	CAP, MYLAR 0.0022uF 5% 50V
C155	1-124-583-11	s	CAP, ELECT 22uF 20% 22V
C156	1-162-671-11	s	CAP, CERAMIC 22PF 5% 50V
C160	1-162-879-11	s	CAP, CERAMIC 100PF 5% 50V
C163	1-162-887-11	s	CAP, CERAMIC 270PF 5% 50V
C166	1-124-583-11	s	CAP, ELECT 22uF 20% 22V
C168	1-124-583-11	s	CAP, ELECT 22uF 20% 22V
C171	1-162-882-11	s	CAP, CERAMIC 180PF 5% 50V
C172	1-162-885-11	s	CAP, CERAMIC 330PF 5% 50V
C173	1-130-471-00	s	CAP, MYLAR 0.001uF 5% 50V
C175	1-124-583-11	s	CAP, ELECT 22uF 20% 22V
C176	1-124-583-11	s	CAP, ELECT 22uF 20% 22V
C179	1-162-757-11	s	CAP, CERAMIC 220PF 5% 50V
C182	1-130-491-00	s	CAP, MYLAR 0.047uF 5% 50V
C183	1-130-483-00	s	CAP, MYLAR 0.01uF 5% 50V
C185	1-130-474-00	s	CAP, MYLAR 0.0018uF 5% 50V
C186	1-102-074-00	s	CAP, CERAMIC 0.001uF 10% 50V
C187	1-102-074-00	s	CAP, CERAMIC 0.001uF 10% 50V
C190	1-131-347-00	s	CAP, TANT 1uF 20% 35V
C191	1-162-880-11	s	CAP, CERAMIC 120PF 5% 50V
C192	1-130-471-00	s	CAP, MYLAR 0.001uF 5% 50V
C193	1-124-565-00	s	CAP, ELECT 56uF 20% 6.3V
C194	1-131-351-00	s	CAP, TANT 4.7uF 10% 35V
C195	1-130-483-00	s	CAP, MYLAR 0.01uF 5% 50V
C197	1-131-351-00	s	CAP, TANT 4.7uF 10% 35V
C200	1-124-565-00	s	CAP, ELECT 56uF 20% 6.3V
C203	1-131-351-00	s	CAP, TANT 4.7uF 10% 35V
C206	1-124-583-11	s	CAP, ELECT 22uF 20% 22V
C229	1-131-367-00	s	CAP, TANT 22uF 10% 20V
C241	1-162-672-11	s	CAP, CERAMIC 27PF 5% 50V
C304	1-124-583-11	s	CAP, ELECT 22uF 20% 22V
C306	1-124-583-11	s	CAP, ELECT 22uF 20% 22V
C309	1-124-583-11	s	CAP, ELECT 22uF 20% 22V
C311	1-124-583-11	s	CAP, ELECT 22uF 20% 22V
C313	1-124-583-11	s	CAP, ELECT 22uF 20% 22V
C318	1-124-583-11	s	CAP, ELECT 22uF 20% 22V
C320	1-162-879-11	s	CAP, CERAMIC 100PF 5% 50V
C323	1-162-879-11	s	CAP, CERAMIC 100PF 5% 50V
C327	1-130-482-00	s	CAP, MYLAR 0.0082uF 5% 50V
C335	1-124-583-11	s	CAP, ELECT 22uF 20% 22V

(SG-138 BARD, HDSC-1000)

Ref. No. or Qty	Part No.	SP	Description
C339	1-130-482-00	s	CAP, MYLAR 0.0082uF 5% 50V
C340	1-162-763-21	s	CAP, CERAMIC 680PF 5% 50V
C344	1-124-583-11	s	CAP, ELECT 22uF 20% 22V
C347	1-162-761-11	s	CAP, CERAMIC 470PF 5% 50V
C351	1-130-474-00	s	CAP, MYLAR 0.0018uF 5% 50V
C352	1-130-475-00	s	CAP, MYLAR 0.0022uF 5% 50V
C355	1-124-583-11	s	CAP, ELECT 22uF 20% 22V
C356	1-162-671-11	s	CAP, CERAMIC 22PF 5% 50V
C360	1-162-879-11	s	CAP, CERAMIC 100PF 5% 50V
C363	1-162-887-11	s	CAP, CERAMIC 270PF 5% 50V
C366	1-124-583-11	s	CAP, ELECT 22uF 20% 22V
C368	1-124-583-11	s	CAP, ELECT 22uF 20% 22V
C371	1-162-882-11	s	CAP, CERAMIC 180PF 5% 50V
C372	1-162-885-11	s	CAP, CERAMIC 330PF 5% 50V
C373	1-130-471-00	s	CAP, MYLAR 0.001uF 5% 50V
C375	1-124-583-11	s	CAP, ELECT 22uF 20% 22V
C376	1-124-583-11	s	CAP, ELECT 22uF 20% 22V
C379	1-162-757-11	s	CAP, CERAMIC 220PF 5% 50V
C382	1-130-491-00	s	CAP, MYLAR 0.047uF 5% 50V
C383	1-130-483-00	s	CAP, MYLAR 0.01uF 5% 50V
C385	1-130-474-00	s	CAP, MYLAR 0.0018uF 5% 50V
C386	1-102-074-00	s	CAP, CERAMIC 0.001uF 10% 50V
C387	1-102-074-00	s	CAP, CERAMIC 0.001uF 10% 50V
C390	1-131-347-00	s	CAP, TANT 1uF 20% 35V
C391	1-162-880-11	s	CAP, CERAMIC 120PF 5% 50V
C392	1-130-471-00	s	CAP, MYLAR 0.001uF 5% 50V
C393	1-124-565-00	s	CAP, ELECT 56uF 20% 6.3V
C394	1-131-351-00	s	CAP, TANT 4.7uF 10% 35V
C395	1-130-483-00	s	CAP, MYLAR 0.01uF 5% 50V
C397	1-131-351-00	s	CAP, TANT 4.7uF 10% 35V
C400	1-124-565-00	s	CAP, ELECT 56uF 20% 6.3V
C403	1-131-351-00	s	CAP, TANT 4.7uF 10% 35V
C429	1-131-367-00	s	CAP, TANT 22uF 10% 20V
C441	1-162-672-11	s	CAP, CERAMIC 27PF 5% 50V
C502	1-162-871-11	s	CAP, CERAMIC 47PF 5% 50V
C504	1-131-367-00	s	CAP, TANT 22uF 10% 20V
C505	1-162-670-11	s	CAP, CERAMIC 18PF 5% 50V
C506	1-131-367-00	s	CAP, TANT 22uF 10% 20V
C512	1-131-367-00	s	CAP, TANT 22uF 10% 20V
C514	1-162-673-11	s	CAP, CERAMIC 33PF 5% 50V
C517	1-131-367-00	s	CAP, TANT 22uF 10% 20V
C522	1-162-670-11	s	CAP, CERAMIC 18PF 5% 50V
C532	1-162-871-11	s	CAP, CERAMIC 47PF 5% 50V
C534	1-131-367-00	s	CAP, TANT 22uF 10% 20V
C535	1-162-670-11	s	CAP, CERAMIC 18PF 5% 50V
C536	1-131-367-00	s	CAP, TANT 22uF 10% 20V
C542	1-131-367-00	s	CAP, TANT 22uF 10% 20V
C544	1-162-673-11	s	CAP, CERAMIC 33PF 5% 50V
C547	1-131-367-00	s	CAP, TANT 22uF 10% 20V
C552	1-162-670-11	s	CAP, CERAMIC 18PF 5% 50V
C572	1-162-871-11	s	CAP, CERAMIC 47PF 5% 50V
C574	1-131-367-00	s	CAP, TANT 22uF 10% 20V
C575	1-162-670-11	s	CAP, CERAMIC 18PF 5% 50V
C576	1-131-367-00	s	CAP, TANT 22uF 10% 20V
C582	1-131-367-00	s	CAP, TANT 22uF 10% 20V
C584	1-162-673-11	s	CAP, CERAMIC 33PF 5% 50V
C587	1-131-367-00	s	CAP, TANT 22uF 10% 20V
C592	1-162-670-11	s	CAP, CERAMIC 18PF 5% 50V
C602	1-162-746-11	s	CAP, CERAMIC 51PF 5% 50V
C609	1-131-367-00	s	CAP, TANT 22uF 10% 20V
C610	1-131-367-00	s	CAP, TANT 22uF 10% 20V
C611	1-162-748-11	s	CAP, CERAMIC 62PF 5% 50V
C612	1-131-367-00	s	CAP, TANT 22uF 10% 20V
C615	1-131-367-00	s	CAP, TANT 22uF 10% 20V
C702	1-162-871-11	s	CAP, CERAMIC 47PF 5% 50V
C704	1-131-367-00	s	CAP, TANT 22uF 10% 20V
C705	1-162-670-11	s	CAP, CERAMIC 18PF 5% 50V
C706	1-131-367-00	s	CAP, TANT 22uF 10% 20V
C712	1-131-367-00	s	CAP, TANT 22uF 10% 20V
C714	1-162-673-11	s	CAP, CERAMIC 33PF 5% 50V
C717	1-131-367-00	s	CAP, TANT 22uF 10% 20V
C722	1-162-670-11	s	CAP, CERAMIC 18PF 5% 50V
C732	1-162-871-11	s	CAP, CERAMIC 47PF 5% 50V
C734	1-131-367-00	s	CAP, TANT 22uF 10% 20V
C735	1-162-670-11	s	CAP, CERAMIC 18PF 5% 50V

NOTE: Please see pages D-7 and D-8 for the part numbers of capacitors and resistors that are not listed in the parts list.

(SG-138 BOARD, HDSC-1000)

Ref. No. or Qty	Part No.	SP	Description
C736	1-131-367-00	s	CAP, TANT 22uF 10% 20V
C742	1-131-367-00	s	CAP, TANT 22uF 10% 20V
C744	1-162-673-11	s	CAP, CERAMIC 33PF 5% 50V
C747	1-131-367-00	s	CAP, TANT 22uF 10% 20V
C752	1-162-670-11	s	CAP, CERAMIC 18PF 5% 50V
C772	1-162-871-11	s	CAP, CERAMIC 47PF 5% 50V
C774	1-131-367-00	s	CAP, TANT 22uF 10% 20V
C775	1-162-670-11	s	CAP, CERAMIC 18PF 5% 50V
C776	1-131-367-00	s	CAP, TANT 22uF 10% 20V
C782	1-131-367-00	s	CAP, TANT 22uF 10% 20V
C784	1-162-673-11	s	CAP, CERAMIC 33PF 5% 50V
C787	1-131-367-00	s	CAP, TANT 22uF 10% 20V
C792	1-162-670-11	s	CAP, CERAMIC 18PF 5% 50V
C802	1-162-746-11	s	CAP, CERAMIC 51PF 5% 50V
C809	1-131-367-00	s	CAP, TANT 22uF 10% 20V
C810	1-131-367-00	s	CAP, TANT 22uF 10% 20V
C811	1-162-748-11	s	CAP, CERAMIC 62PF 5% 50V
C812	1-131-367-00	s	CAP, TANT 22uF 10% 20V
C815	1-131-367-00	s	CAP, TANT 22uF 10% 20V
CV500	1-141-232-00	s	CAP, TRIMMER 11PF
CV510	1-141-232-00	s	CAP, TRIMMER 11PF
CV520	1-141-232-00	s	CAP, TRIMMER 11PF
CV700	1-141-232-00	s	CAP, TRIMMER 11PF
CV710	1-141-232-00	s	CAP, TRIMMER 11PF
CV720	1-141-232-00	s	CAP, TRIMMER 11PF
D100	8-719-903-27	s	DIODE 1SS168
D101	8-719-903-27	s	DIODE 1SS168
D103	8-719-903-27	s	DIODE 1SS168
D105	8-719-903-27	s	DIODE 1SS168
D106	8-719-903-27	s	DIODE 1SS168
D107	8-719-812-41	s	LED TLR124, RED
D108	8-719-812-43	s	LED TLG124A, GREEN
D109	8-719-903-27	s	DIODE 1SS168
D111	8-719-100-48	s	DIODE RD8.2EB2
D200	8-719-903-27	s	DIODE 1SS168
D300	8-719-903-27	s	DIODE 1SS168
D301	8-719-903-27	s	DIODE 1SS168
D303	8-719-903-27	s	DIODE 1SS168
D305	8-719-903-27	s	DIODE 1SS168
D306	8-719-903-27	s	DIODE 1SS168
D307	8-719-812-41	s	LED TLR124, RED
D308	8-719-812-43	s	LED TLG124A, GREEN
D309	8-719-903-27	s	DIODE 1SS168
D500	8-719-100-38	s	DIODE RD6.2E-B2
D501	8-719-100-38	s	DIODE RD6.2E-B2
D510	8-719-100-38	s	DIODE RD6.2E-B2
D511	8-719-100-38	s	DIODE RD6.2E-B2
D520	8-719-100-38	s	DIODE RD6.2E-B2
D521	8-719-100-38	s	DIODE RD6.2E-B2
D600	8-719-100-38	s	DIODE RD6.2E-B2
D601	8-719-100-38	s	DIODE RD6.2E-B2
D700	8-719-100-38	s	DIODE RD6.2E-B2
D701	8-719-100-38	s	DIODE RD6.2E-B2
D710	8-719-100-38	s	DIODE RD6.2E-B2
D711	8-719-100-38	s	DIODE RD6.2E-B2
D720	8-719-100-38	s	DIODE RD6.2E-B2
D721	8-719-100-38	s	DIODE RD6.2E-B2
D800	8-719-100-38	s	DIODE RD6.2E-B2
D801	8-719-100-38	s	DIODE RD6.2E-B2
FL100	1-236-107-11	s	FILTER, BANDPASS 12.96MHz
FL101	1-236-106-11	s	FILTER, BANDPASS 6.14MHz
FL102	1-236-105-11	s	FILTER, LOW-PASS 17.5MHz
FL103	1-236-104-11	s	FILTER, LOW-PASS 9MHz
FL300	1-236-107-11	s	FILTER, BANDPASS 12.96MHz
FL301	1-236-106-11	s	FILTER, BANDPASS 6.14MHz
FL302	1-236-105-11	s	FILTER, LOW-PASS 17.5MHz
FL303	1-236-104-11	s	FILTER, LOW-PASS 9MHz
FL500	1-236-103-11	s	FILTER, LOW-PASS 2MHz
FL501	1-236-103-11	s	FILTER, LOW-PASS 2MHz
FL502	1-236-103-11	s	FILTER, LOW-PASS 2MHz
FL600	1-236-103-11	s	FILTER, LOW-PASS 2MHz
FL700	1-236-103-11	s	FILTER, LOW-PASS 2MHz
FL701	1-236-103-11	s	FILTER, LOW-PASS 2MHz
FL702	1-236-103-11	s	FILTER, LOW-PASS 2MHz
FL800	1-236-103-11	s	FILTER, LOW-PASS 2MHz
ICA1	8-749-936-61	s	IC BX-366A

(SG-138 BOARD, HDSC-1000)

Ref. No. or Qty	Part No.	SP	Description
ICA2	8-749-936-51	s	IC BX-365A
ICA3	8-759-904-20	s	IC MB4002
ICA4	8-759-938-93	s	IC 74F157APC
ICA5	8-759-203-83	s	IC TC74HC4538P
ICA6	8-759-904-84	s	IC 74F74PC
ICA7	8-759-947-23	s	IC TL721CP
ICA8	8-759-906-07	s	IC TL607CP
ICA15	8-752-304-30	s	IC CX23043
ICA17	8-759-768-52	s	IC, PROM MB7142H-BBA3
ICA19	8-759-904-87	s	IC 74F374PC
ICA20	8-759-906-78	s	IC 74F399PC
ICA21	8-759-947-29	s	IC VDAC1852N
ICA23	8-759-918-71	s	IC CX23065
ICA29	8-759-927-85	s	IC CA3102E
ICB2	8-759-914-44	s	IC TL431CLPB
ICB3	8-759-926-10	s	IC TL610CP
ICB9	8-759-914-44	s	IC TL431CLPB
ICB27	8-759-930-54	s	IC CA3054
ICC5	8-759-926-10	s	IC TL610CP
ICC6	8-759-906-07	s	IC TL607CP
ICC7	8-749-936-51	s	IC BX-365A
ICC8	8-759-918-71	s	IC CX23065
ICC10	8-759-001-16	s	IC MC10116L
ICC11	8-759-001-25	s	IC MC10125L
ICC31	8-743-931-10	s	IC BX-3931A
ICD3	8-759-906-85	s	IC AM685DL
ICD4	8-759-001-25	s	IC MC10125L
ICD14	8-759-203-51	s	IC TC74HCT574P
ICD16	8-759-783-25	s	IC, EPROM 27C64-SCV-1
ICD18	8-759-768-53	s	IC, PROM MB7142H-BBA2
ICD20	8-759-904-87	s	IC 74F374PC
ICD21	8-759-906-78	s	IC 74F399PC
ICD27	8-741-124-41	s	IC BX-1244A
ICE2	8-759-914-44	s	IC TL431CLPB
ICE4	8-759-904-20	s	IC MB4002
ICE5	8-759-930-80	s	IC CA3080E
ICE8	8-759-202-11	s	IC TC74HC00P
ICE9	8-759-300-26	s	IC HD10136
ICE10	8-759-202-11	s	IC TC74HC00P
ICE13	8-759-202-32	s	IC TC74HC163P
ICE23	8-759-202-27	s	IC TC74HC157P
ICE24	8-759-202-32	s	IC TC74HC163P
ICE27	8-759-930-54	s	IC CA3054
ICE29	8-759-927-85	s	IC CA3102E
ICF2	8-749-936-51	s	IC BX-365A
ICF3	8-749-936-51	s	IC BX-365A
ICF4	8-749-936-61	s	IC BX-366A
ICF5	8-759-990-82	s	IC TL082CP
ICF6	8-749-936-61	s	IC BX-366A
ICF8	8-759-001-98	s	IC MC10198L
ICF9	8-759-202-14	s	IC TC74HC08P
ICF10	8-759-208-06	s	IC TC4051BPHB
ICF12	8-759-916-29	s	IC SN74HC74N
ICF13	8-759-915-93	s	IC 74F163APC
ICF14	8-759-915-93	s	IC 74F163APC
ICF27	8-741-124-41	s	IC BX-1244A
ICF31	8-743-931-10	s	IC BX-3931A
ICG3	8-749-936-61	s	IC BX-366A
ICG5	8-759-904-20	s	IC MB4002
ICG6	8-759-990-82	s	IC TL082CP
ICG16	8-759-783-26	s	IC, PROM MB7134H-TRI-1
ICG17	8-759-783-27	s	IC, PROM MB7134H-SCH-1
ICG18	8-759-947-10	s	IC 74ACT374PC
ICG20	8-757-930-11	s	IC CX-7930A
ICG22	8-759-203-34	s	IC TC74HC368P
ICG23	8-759-202-32	s	IC TC74HC163P
ICG24	8-759-202-12	s	IC TC74HC02P
ICG29	8-759-927-85	s	IC CA3102E
ICH2	8-759-916-29	s	IC SN74HC74N
ICH3	8-759-202-17	s	IC TC74HC14P
ICH5	8-759-902-21	s	IC SN74LS221N
ICH6	8-759-045-57	s	IC MC14557BCP
ICH7	8-759-916-29	s	IC SN74HC74N
ICH9	8-759-203-83	s	IC TC74HC4538P

NOTE: Please see pages D-7 and D-8 for the part numbers of capacitors and resistors that are not listed in the parts list.

(SG-138 BOARD, HDSC-1000)

Ref. No. or Qty	Part No.	SP	Description
ICH10	8-759-203-83	s	IC TC74HC4538P
ICH12	8-759-916-29	s	IC SN74HC74N
ICH13	8-759-904-80	s	IC 74F04PC
ICH14	8-759-906-71	s	IC 74F175PC
ICH27	8-759-930-54	s	IC CA3054
ICJ20	8-749-936-61	s	IC BX-366A
ICJ23	8-749-936-61	s	IC BX-366A
ICJ27	8-741-124-41	s	IC BX-1244A
ICJ31	8-743-931-10	s	IC BX-3931A
ICK2	8-759-783-28	s	IC, PROM MB7112L-ADD-1
ICK3	8-759-202-11	s	IC TC74HC00P
ICK4	8-759-203-83	s	IC TC74HC4538P
ICK5	8-759-045-57	s	IC MC14557BCP
ICK6	8-759-916-29	s	IC SN74HC74N
ICK8	8-759-203-83	s	IC TC74HC4538P
ICK9	8-759-203-83	s	IC TC74HC4538P
ICK11	8-759-700-82	s	IC NJM556D
ICK13	8-759-947-15	s	IC 74ACT377PC
ICK14	8-759-904-87	s	IC 74F374PC
ICK16	8-759-768-55	s	IC, PROM MB7142H-BBA0
ICK18	8-759-768-54	s	IC, PROM MB7142H-BBA1
ICK22	8-759-924-11	s	IC IR2411
ICK23	8-759-301-24	s	IC HD10124
ICK26	8-759-930-54	s	IC CA3054
ICK27	8-741-124-41	s	IC BX-1244A
ICK29	8-759-930-54	s	IC CA3054
ICK31	8-743-931-10	s	IC BX-3931A
ICL1	8-749-936-61	s	IC BX-366A
ICL2	8-749-936-51	s	IC BX-365A
ICL3	8-759-904-20	s	IC MB4002
ICL4	8-759-938-93	s	IC 74F157APC
ICL5	8-759-203-83	s	IC TC74HC4538P
ICL6	8-759-904-84	s	IC 74F74PC
ICL7	8-759-947-23	s	IC TL721CP
ICL8	8-759-906-07	s	IC TL607CP
ICL15	8-752-304-30	s	IC CX23043
ICL17	8-759-768-52	s	IC, PROM MB7142H-BBA3
ICL19	8-759-904-87	s	IC 74F374PC
ICL20	8-759-906-78	s	IC 74F399PC
ICL21	8-759-947-29	s	IC VDAC1852N
ICL27	8-759-930-54	s	IC CA3054
ICL29	8-759-927-85	s	IC CA3102E
ICM2	8-759-914-44	s	IC TL431CLPB
ICM3	8-759-926-10	s	IC TL610CP
ICM7	8-749-936-51	s	IC BX-365A
ICM8	8-759-918-71	s	IC CX23065
ICM9	8-759-914-44	s	IC TL431CLPB
ICM10	8-759-001-16	s	IC MC10116L
ICM11	8-759-001-25	s	IC MC10125L
ICM27	8-741-124-41	s	IC BX-1244A
ICM31	8-743-931-10	s	IC BX-3931A
ICN3	8-759-906-85	s	IC AM685DL
ICN4	8-759-001-25	s	IC MC10125L
ICN5	8-759-926-10	s	IC TL610CP
ICN6	8-759-906-07	s	IC TL607CP
ICP5	8-759-930-80	s	IC CA3080E
ICP20	8-759-904-87	s	IC 74F374PC
ICP21	8-759-906-78	s	IC 74F399PC
ICQ3	8-759-914-44	s	IC TL431CLPB
ICQ4	8-759-904-20	s	IC MB4002
ICQ8	8-759-202-11	s	IC TC74HC00P
ICQ9	8-759-300-26	s	IC HD10136
ICQ10	8-759-202-11	s	IC TC74HC00P
ICQ13	8-759-202-32	s	IC TC74HC163P
ICQ14	8-759-203-51	s	IC TC74HCT574P
ICQ15	8-759-783-25	s	IC, EPROM 27C64-SCV-1
ICQ18	8-759-768-53	s	IC, PROM MB7142H-BBA2
ICQ27	8-759-930-54	s	IC CA3054
ICQ29	8-759-927-85	s	IC CA3102E
ICR2	8-749-936-51	s	IC BX-365A
ICR3	8-749-936-51	s	IC BX-365A
ICR4	8-749-936-61	s	IC BX-366A
ICR5	8-759-990-82	s	IC TL082CP

(SG-138 BOARD, HDSC-1000)

Ref. No. or Qty	Part No.	SP	Description
ICR6	8-749-936-61	s	IC BX-366A
ICR8	8-759-001-98	s	IC MC10198L
ICR9	8-759-202-14	s	IC TC74HC08P
ICR10	8-759-208-06	s	IC TC4051BPHB
ICR12	8-759-916-29	s	IC SN74HC74N
ICR13	8-759-915-93	s	IC 74F163APC
ICR14	8-759-915-93	s	IC 74F163APC
ICR27	8-741-124-41	s	IC BX-1244A
ICR31	8-743-931-10	s	IC BX-3931A
ICS3	8-749-936-61	s	IC BX-366A
ICS5	8-759-904-20	s	IC MB4002
ICS6	8-759-990-82	s	IC TL082CP
ICS16	8-759-783-26	s	IC,PROM MB7134H-TRI-1
ICS17	8-759-783-27	s	IC,PROM MB7134H-SCH-1
ICS18	8-759-947-10	s	IC 74ACT374PC
ICS27	8-759-930-54	s	IC CA3054
ICS29	8-759-927-85	s	IC CA3102E
ICT1	8-759-783-28	s	IC, PROM MB7112L-ADD-1
ICT2	8-759-916-29	s	IC SN74HC74N
ICT3	8-759-202-17	s	IC TC74HC14P
ICT5	8-759-902-21	s	IC SN74LS221N
ICT6	8-759-045-57	s	IC MC14557BCP
ICT7	8-759-916-29	s	IC SN74HC74N
ICT9	8-759-203-83	s	IC TC74HC4538P
ICT10	8-759-203-83	s	IC TC74HC4538P
ICT12	8-759-916-29	s	IC SN74HC74N
ICT13	8-759-904-80	s	IC 74F04PC
ICT14	8-759-906-71	s	IC 74F175PC
ICU27	8-741-124-41	s	IC BX-1244A
ICU31	8-743-931-10	s	IC BX-3931A
ICV3	8-759-202-11	s	IC TC74HC00P
ICV4	8-759-203-83	s	IC TC74HC4538P
ICV5	8-759-045-57	s	IC MC14557BCP
ICV6	8-759-916-29	s	IC SN74HC74N
ICV8	8-759-203-83	s	IC TC74HC4538P
ICV9	8-759-203-83	s	IC TC74HC4538P
ICV11	8-759-700-82	s	IC NJM556D
ICV13	8-759-947-15	s	IC 74ACT377PC
ICV14	8-759-904-87	s	IC 74F374PC
ICV16	8-759-768-55	s	IC, PROM MB7142H-BBA0
ICV18	8-759-768-54	s	IC, PROM MB7142H-BBA1
ICV23	8-759-301-24	s	IC HD10124
ICV26	8-759-930-54	s	IC CA3054
ICV27	8-741-124-41	s	IC BX-1244A
ICV29	8-759-930-54	s	IC CA3054
ICV31	8-743-931-10	s	IC BX-3931A
L1	1-408-397-00	s	INDUCTOR 1UH
L2	1-408-405-00	s	INDUCTOR 4.7UH
L3	1-408-410-00	s	INDUCTOR 12UH
L4	1-421-329-00	s	COIL, CHOKE
L5	1-421-370-00	s	COIL, CHOKE
L6	1-421-329-00	s	COIL, CHOKE
L7	1-421-329-00	s	COIL, CHOKE
L100	1-410-328-11	s	INDUCTOR 10UH
L101	1-410-518-41	s	INDUCTOR 56UH
L102	1-410-328-11	s	INDUCTOR 10UH
L104	1-412-021-11	s	COIL, VARIABLE 0.14UH
L300	1-410-328-11	s	INDUCTOR 10UH
L301	1-410-518-41	s	INDUCTOR 56UH
L302	1-410-328-11	s	INDUCTOR 10UH
L304	1-412-021-11	s	COIL, VARIABLE 0.14UH
L500	1-412-021-11	s	COIL, VARIABLE 0.14UH
L501	1-410-328-11	s	INDUCTOR 10UH
L502	1-410-328-11	s	INDUCTOR 10UH
L503	1-410-328-11	s	INDUCTOR 10UH
L504	1-410-328-11	s	INDUCTOR 10UH
L510	1-412-021-11	s	COIL, VARIABLE 0.14UH
L511	1-410-328-11	s	INDUCTOR 10UH
L512	1-410-328-11	s	INDUCTOR 10UH
L513	1-410-328-11	s	INDUCTOR 10UH
L514	1-410-328-11	s	INDUCTOR 10UH
L520	1-412-021-11	s	COIL, VARIABLE 0.14UH
L521	1-410-328-11	s	INDUCTOR 10UH
L522	1-410-328-11	s	INDUCTOR 10UH

NOTE: Please see pages D-7 and D-8 for the part numbers of capacitors and resistors that are not listed in the parts list.

(SG-138 BOARD, HDSC-1000)

Ref. No. or Qty	Part No.	SP	Description
L523	1-410-328-11	s	INDUCTOR 10UH
L524	1-410-328-11	s	INDUCTOR 10UH
L600	1-410-328-11	s	INDUCTOR 10UH
L601	1-410-328-11	s	INDUCTOR 10UH
L602	1-410-328-11	s	INDUCTOR 10UH
L603	1-410-328-11	s	INDUCTOR 10UH
L700	1-412-021-11	s	COIL, VARIABLE 0.14UH
L701	1-410-328-11	s	INDUCTOR 10UH
L702	1-410-328-11	s	INDUCTOR 10UH
L703	1-410-328-11	s	INDUCTOR 10UH
L704	1-410-328-11	s	INDUCTOR 10UH
L710	1-412-021-11	s	COIL, VARIABLE 0.14UH
L711	1-410-328-11	s	INDUCTOR 10UH
L712	1-410-328-11	s	INDUCTOR 10UH
L713	1-410-328-11	s	INDUCTOR 10UH
L714	1-410-328-11	s	INDUCTOR 10UH
L720	1-412-021-11	s	COIL, VARIABLE 0.14UH
L721	1-410-328-11	s	INDUCTOR 10UH
L722	1-410-328-11	s	INDUCTOR 10UH
L723	1-410-328-11	s	INDUCTOR 10UH
L724	1-410-328-11	s	INDUCTOR 10UH
L800	1-410-328-11	s	INDUCTOR 10UH
L801	1-410-328-11	s	INDUCTOR 10UH
L802	1-410-328-11	s	INDUCTOR 10UH
L803	1-410-328-11	s	INDUCTOR 10UH
Q1	8-729-900-80	s	TRANSISTOR DTC114ES
Q2	8-729-900-61	s	TRANSISTOR DTA114ES
Q3	8-729-900-80	s	TRANSISTOR DTC114ES
Q4	8-729-900-61	s	TRANSISTOR DTA114ES
Q100	8-729-105-71	s	TRANSISTOR 2SK523-K2
Q101	8-729-105-71	s	TRANSISTOR 2SK523-K2
Q102	8-729-105-71	s	TRANSISTOR 2SK523-K2
Q103	8-729-110-52	s	TRANSISTOR 2SA1005-L
Q104	8-729-105-73	s	TRANSISTOR 2SK523-L2
Q105	8-729-204-83	s	TRANSISTOR 2SA1048-GR
Q106	8-729-204-83	s	TRANSISTOR 2SA1048-GR
Q107	8-729-204-83	s	TRANSISTOR 2SA1048-GR
Q108	8-729-204-83	s	TRANSISTOR 2SA1048-GR
Q110	8-729-110-52	s	TRANSISTOR 2SA1005-L
Q111	8-729-105-47	s	TRANSISTOR 2SC2026-L
Q112	8-729-900-80	s	TRANSISTOR DTC114ES
Q113	8-729-900-61	s	TRANSISTOR DTA114ES
Q114	8-729-900-80	s	TRANSISTOR DTC114ES
Q115	8-729-900-61	s	TRANSISTOR DTA114ES
Q300	8-729-105-71	s	TRANSISTOR 2SK523-K2
Q301	8-729-105-71	s	TRANSISTOR 2SK523-K2
Q302	8-729-105-71	s	TRANSISTOR 2SK523-K2
Q303	8-729-110-52	s	TRANSISTOR 2SA1005-L
Q304	8-729-105-73	s	TRANSISTOR 2SK523-L2
Q305	8-729-204-83	s	TRANSISTOR 2SA1048-GR
Q306	8-729-204-83	s	TRANSISTOR 2SA1048-GR
Q307	8-729-204-83	s	TRANSISTOR 2SA1048-GR
Q308	8-729-204-83	s	TRANSISTOR 2SA1048-GR
Q310	8-729-110-52	s	TRANSISTOR 2SA1005-L
Q312	8-729-900-80	s	TRANSISTOR DTC114ES
Q313	8-729-900-61	s	TRANSISTOR DTA114ES
Q314	8-729-900-80	s	TRANSISTOR DTC114ES
Q315	8-729-900-61	s	TRANSISTOR DTA114ES
Q500	8-729-105-71	s	TRANSISTOR 2SK523-K2
Q501	8-729-105-71	s	TRANSISTOR 2SK523-K2
Q502	8-729-105-47	s	TRANSISTOR 2SC2026-L
Q503	8-729-105-47	s	TRANSISTOR 2SC2026-L
Q504	8-729-304-39	s	TRANSISTOR 2SC3391-C
Q505	8-729-105-47	s	TRANSISTOR 2SC2026-L
Q506	8-729-200-43	s	TRANSISTOR 2SA1048L-GR
Q510	8-729-105-71	s	TRANSISTOR 2SK523-K2
Q511	8-729-105-71	s	TRANSISTOR 2SK523-K2
Q512	8-729-105-47	s	TRANSISTOR 2SC2026-L
Q513	8-729-105-47	s	TRANSISTOR 2SC2026-L
Q514	8-729-105-47	s	TRANSISTOR 2SC2026-L
Q516	8-729-200-43	s	TRANSISTOR 2SA1048L-GR
Q520	8-729-105-71	s	TRANSISTOR 2SK523-K2

(SG-138 BOARD, HDSC-1000)

Ref. No. or Qty	Part No.	SP	Description
Q521	8-729-105-71	s	TRANSISTOR 2SK523-K2
Q522	8-729-105-47	s	TRANSISTOR 2SC2026-L
Q523	8-729-105-47	s	TRANSISTOR 2SC2026-L
Q524	8-729-105-47	s	TRANSISTOR 2SC2026-L
Q526	8-729-200-43	s	TRANSISTOR 2SA1048L-GR
Q600	8-729-105-47	s	TRANSISTOR 2SC2026-L
Q601	8-729-105-47	s	TRANSISTOR 2SC2026-L
Q700	8-729-105-71	s	TRANSISTOR 2SK523-K2
Q701	8-729-105-71	s	TRANSISTOR 2SK523-K2
Q702	8-729-105-47	s	TRANSISTOR 2SC2026-L
Q703	8-729-105-47	s	TRANSISTOR 2SC2026-L
Q704	8-729-304-39	s	TRANSISTOR 2SC3391-C
Q707	8-729-200-43	s	TRANSISTOR 2SA1048L-GR
Q710	8-729-105-71	s	TRANSISTOR 2SK523-K2
Q711	8-729-105-71	s	TRANSISTOR 2SK523-K2
Q712	8-729-105-47	s	TRANSISTOR 2SC2026-L
Q713	8-729-105-47	s	TRANSISTOR 2SC2026-L
Q716	8-729-200-43	s	TRANSISTOR 2SA1048L-GR
Q720	8-729-105-71	s	TRANSISTOR 2SK523-K2
Q721	8-729-105-71	s	TRANSISTOR 2SK523-K2
Q722	8-729-105-47	s	TRANSISTOR 2SC2026-L
Q723	8-729-105-47	s	TRANSISTOR 2SC2026-L
Q726	8-729-200-43	s	TRANSISTOR 2SA1048L-GR
Q800	8-729-105-47	s	TRANSISTOR 2SC2026-L
Q801	8-729-105-47	s	TRANSISTOR 2SC2026-L
R2	1-215-493-00	s	RES, METAL 1M 1% 1/6W
R219	1-215-471-00	s	RES, METAL 120K 1% 1/6W
R232	1-214-108-00	s	RES, METAL 100 1% 1/4W
R419	1-215-471-00	s	RES, METAL 120K 1% 1/6W
R690	1-215-429-00	s	RES, METAL 2.2K 1% 1/6W
R692	1-215-429-00	s	RES, METAL 2.2K 1% 1/6W
R694	1-215-429-00	s	RES, METAL 2.2K 1% 1/6W
R696	1-215-421-00	s	RES, METAL 1K 1% 1/6W
R890	1-215-429-00	s	RES, METAL 2.2K 1% 1/6W
R892	1-215-429-00	s	RES, METAL 2.2K 1% 1/6W
R894	1-215-429-00	s	RES, METAL 2.2K 1% 1/6W
R896	1-215-421-00	s	RES, METAL 1K 1% 1/6W
RB600	1-235-452-11	s	RESISTOR BLOCK, 330X4
RB800	1-235-452-11	s	RESISTOR BLOCK, 330X4
RV100	1-228-457-00	s	RES, VAR, CERMET 2K
RV101	1-228-456-00	s	RES, VAR, CERMET 1K
RV110	1-228-455-00	s	RES, VAR, CERMET 500
RV111	1-228-462-00	s	RES, VAR, CERMET 100K
RV120	1-228-456-00	s	RES, VAR, CERMET 1K
RV200	1-228-454-00	s	RES, ADJ, CERMET 200
RV210	1-228-456-00	s	RES, VAR, CERMET 1K
RV300	1-228-457-00	s	RES, VAR, CERMET 2K
RV301	1-228-456-00	s	RES, VAR, CERMET 1K
RV310	1-228-455-00	s	RES, VAR, CERMET 500
RV311	1-228-462-00	s	RES, VAR, CERMET 100K
RV320	1-228-456-00	s	RES, VAR, CERMET 1K
RV400	1-228-454-00	s	RES, ADJ, CERMET 200
RV410	1-228-456-00	s	RES, VAR, CERMET 1K
RV501	1-228-453-00	s	RES, ADJ, CERMET 100
RV502	1-228-460-00	s	RES, VAR, CERMET 20K
RV511	1-228-453-00	s	RES, ADJ, CERMET 100
RV512	1-228-460-00	s	RES, VAR, CERMET 20K
RV521	1-228-453-00	s	RES, ADJ, CERMET 100
RV522	1-228-460-00	s	RES, VAR, CERMET 20K
RV600	1-228-460-00	s	RES, VAR, CERMET 20K
RV701	1-228-453-00	s	RES, ADJ, CERMET 100
RV702	1-228-460-00	s	RES, VAR, CERMET 20K
RV711	1-228-453-00	s	RES, ADJ, CERMET 100
RV712	1-228-460-00	s	RES, VAR, CERMET 20K
RV721	1-228-453-00	s	RES, ADJ, CERMET 100
RV722	1-228-460-00	s	RES, VAR, CERMET 20K
RV800	1-228-460-00	s	RES, VAR, CERMET 20K

NOTE: Please see pages D-7 and D-8 for the part numbers of capacitors and resistors that are not listed in the parts list.

(SG-138 BOARD, HDSC-1000)

Ref. No. or Qty	Part No.	SP	Description
RY100	1-515-622-11	s	RELAY
RY101	1-515-622-11	s	RELAY
RY300	1-515-622-11	s	RELAY
RY301	1-515-622-11	s	RELAY
RY302	1-515-622-11	s	RELAY
RY700	1-515-622-11	s	RELAY
RY710	1-515-622-11	s	RELAY
RY720	1-515-622-11	s	RELAY
S1	1-554-010-00	s	SWITCH, TOGGLE
S2	1-554-010-00	s	SWITCH, TOGGLE
S3	1-554-010-00	s	SWITCH, TOGGLE
S4	1-554-010-00	s	SWITCH, TOGGLE
S5	1-554-010-00	s	SWITCH, TOGGLE
S6	1-554-010-00	s	SWITCH, TOGGLE
S7	1-554-010-00	s	SWITCH, TOGGLE
S8	1-552-509-00	s	SWITCH, DIP
S9	1-552-509-00	s	SWITCH, DIP
S10	1-552-509-00	s	SWITCH, DIP
S11	1-552-509-00	s	SWITCH, DIP
S12	1-552-509-00	s	SWITCH, DIP
S13	1-552-509-00	s	SWITCH, DIP
X2	1-567-645-11	s	VCO, X'TAL 14.3325MHz
X101	1-567-333-11	s	VCO, X'TAL 69.12000MHz
X301	1-567-333-11	s	VCO, X'TAL 69.12000MHz

FRAME, HDSC-1000

Ref. No. or Qty	Part No.	SP	Description
1pc	⚠ 1-534-517-00	s	CORD, POWER(FOR UC)
1pc	⚠ 1-534-535-14	s	CORD, POWER(FOR J)
1pc	⚠ 1-556-371-00	s	CORD, POWER(FOR EK)
1pc	1-940-377-11	o	CABLE ASSY, HDVB-1
CB1	⚠ 1-532-534-31	s	BREAKER, CIRCUT 1.6A
CN1	⚠ 1-561-069-00	o	PLUG, HOUSING, 2P
	⚠ 1-535-206-00	o	CONTACT(FEMALE)
CN2	⚠ 1-561-828-00	o	PLUG, HOUSING, 3P
	⚠ 1-535-206-00	o	CONTACT(FEMALE)
CN61	⚠ 1-563-112-11	o	CONNECTOR, DIVERGE
CN62	⚠ 1-563-112-11	o	CONNECTOR, DIVERGE
CN101	1-561-781-21	s	RECEPTACLE, BNC
CN102	1-561-781-21	s	RECEPTACLE, BNC
CN103	1-561-781-21	s	RECEPTACLE, BNC
CN104	1-561-781-21	s	RECEPTACLE, BNC
CN105	1-561-781-21	s	RECEPTACLE, BNC
CN106	1-561-781-21	s	RECEPTACLE, BNC
CN107	1-561-781-21	s	RECEPTACLE, BNC
CN108	1-561-781-21	s	RECEPTACLE, BNC
CN109	1-561-781-21	s	RECEPTACLE, BNC
CN110	1-561-781-21	s	RECEPTACLE, BNC
CN111	1-561-781-21	s	RECEPTACLE, BNC
CN112	1-561-781-21	s	RECEPTACLE, BNC
CN201	1-561-781-21	s	RECEPTACLE, BNC
CN202	1-561-781-21	s	RECEPTACLE, BNC
CN203	1-561-781-21	s	RECEPTACLE, BNC
CN204	1-561-781-21	s	RECEPTACLE, BNC
CN205	1-561-781-21	s	RECEPTACLE, BNC
CN206	1-561-781-21	s	RECEPTACLE, BNC
CN207	1-561-781-21	s	RECEPTACLE, BNC
CN208	1-561-781-21	s	RECEPTACLE, BNC
CN209	1-561-781-21	s	RECEPTACLE, BNC
CN210	1-561-781-21	s	RECEPTACLE, BNC
CN211	1-561-781-21	s	RECEPTACLE, BNC
CN212	1-561-781-21	s	RECEPTACLE, BNC
CN213	1-561-781-21	s	RECEPTACLE, BNC
M1	1-541-170-31	s	MOTOR, FAN, DC
SW1	⚠ 1-570-117-11	s	SWITCH, ROCKER
SW2	⚠ 1-554-011-00	s	SWITCH, ROCKER

ACCESORIES SUPPLIED, HDSC-1000

Ref. No. or Qty	Part No.	SP	Description
2pcs	X-2127-902-1	o	ANGLE ASSY, RACK(FOR 19" RACK)
2pcs	2-127-906-02	o	PLATE NUT
1pc	2-127-907-01	o	RACK ANGLE, LEFT(FOR SU-1010)
1pc	2-127-908-01	o	RACK ANGLE, RIFGT(FOR SU-1010)
4pcs	7-682-563-09	s	SCREW, +B4x12
4pcs	7-682-626-09	s	SCREW, +K4x10

NOTE: Please see pages D-7 and D-8 for the part numbers of capacitors and resistors that are not listed in the parts list.

SECTION E
CHANGED PARTS

#10101 & UP (HDSC-1000;J)
#10001 & UP (HDSC-1000;UC)

SG-138 BOARD

C505,535,575, 705,735,775	NOT IN USE				1-162-670-11	s	CAP, CERAMIC 5% 50V
C602,802	1-162-745-11	s	CAP, CERAMIC 47PF 5% 50V		1-162-746-11	s	CAP, CERAMIC 51PF 5% 50W
ICF9,K20,R9	8-759-001-06	s	IC, MC74HC08N		DELETED		
ICA21,L21	NOT IN USE				8-759-947-29	s	IC, VDAC 1852N
Q104,304	8-729-105-71	s	TRANSISTOR 2SK523-K2		8-729-105-72	s	TRANSISTOR 2SK523-L1
Q506,516,526, 706,716,726	NOT IN USE				8-729-200-43	s	TRANSISTOR 2SA1048-GR
R682,882	NOT IN USE				1-214-585-00	s	RES, METAL 15K 1% 1/8W
R105,106	1-214-581-00	s	RES, METAL 10K 1% 1/8W		1-214-569-00	s	RES, METAL 3.3K 1% 1/8W
R536,575,613, 736,775,813	1-214-537-00	s	RES, METAL 150 1% 1/8W		1-214-541-00	s	RES, METAL 220 1% 1/8W
Q504,704	8-729-672-43	s	TRANSISTOR 2SC2724D		8-729-304-39	s	TRANSISTOR 2SC3391-C
R505,544,582, 705,744,782	1-214-541-00	s	RES, METAL 220 1% 1/8W		1-214-546-00	s	RES, METAL 360 1% 1/8W
R512,551,589, 712,751,789	1-214-530-00	s	RES, METAL 75 1% 1/8W		1-214-543-00	s	RES, METAL 270 1% 1/8W
R690,692,694, 890,892,894	NOT IN USE				1-215-429-00	s	RES, METAL 2.2K 1% 1/6W
R332	1-214-521-00	s	RES, METAL 33 1% 1/8W		1-214-534-00	s	RES, METAL 110 1% 1/8W
R122	1-214-521-00	s	RES, METAL 33 1% 1/8W		1-214-530-00	s	RES, METAL 75 1% 1/8W
R696,896	NOT IN USE				1-215-421-00	s	RES, METAL 1K 1% 1/8W
R691,693,695, 891,893,895	NOT IN USE				1-214-566-00	s	RES, METAL 2.4K 1% 1/8W
R208,408	NOT IN USE				1-215-493-00	s	RES, METAL 1M 1% 1/6W

UP TO #10199 & UP (HDSC-1000;J)
UP TO #10099 & UP (HDSC-1000;UC)

#10201 & UP (HDSC-1000;J)
#10101 & UP (HDSC-1000;UC)

SG-138 BOARD

C241,441	1-162-674-11	s	CAP, CERAMIC 39PF 5% 50V		1-162-672-11	s	CAP, CERAMIC 27PF 5% 50V
Q104,304	8-729-105-72	s	TRANSISTOR 2SK523-L1		8-729-105-73	s	TRANSISTOR 2SK523-L2
R239,439	NOT IN USE				1-214-525-00	s	RES, METAL 47 1% 1/8W
R536,575,613, 736,775,813	1-214-537-00	s	RES, METAL 150 1% 1/8W		1-214-541-00	s	RES, METAL 220 1% 1/8W
R682,882	1-214-585-11	s	RES, METAL 15K 1% 1/8W		DELETED		
R527,566,604, 727,766,804	NOT IN USE				1-214-566-00	s	RES, METAL 2.4K 1% 1/8W

このマニュアルに記載されている事柄の著作権は当社にあり，説明内容は機器購入者の使用を目的としています。
従って，当社の許可なしに無断で複写したり，説明内容（操作，保守等）と異なる目的で本マニュアルを使用することを禁止します。

The material contained in this manual consists of information that is the property of Sony Corporation and is intended solely for use by the purchasers of the equipment described in this manual.
Sony Corporation expressly prohibits the duplication of any portion of this manual or the use thereof for any purpose other than the operation or maintenance of the equipment described in this manual without the express written permission of Sony Corporation.

Le matériel contenu dans ce manuel consiste en informations qui sont la propriété de Sony Corporation et sont destinées exclusivement à l'usage des acquéreurs de l'équipement décrit dans ce manuel.
Sony Corporation interdit formellement la copie de quelque partie que ce soit de ce manuel ou son emploi pour tout autre but que des opérations ou entretiens de l'équipement à moins d'une permission écrite de Sony Corporation.

Das in dieser Anleitung enthaltene Material besteht aus Informationen, die Eigentum der Sony Corporation sind, und ausschließlich zum Gebrauch durch den Käufer der in dieser Anleitung beschriebenen Ausrüstung bestimmt sind.
Die Sony Corporation untersagt ausdrücklich die Vervielfältigung jeglicher Teile dieser Anleitung oder den Gebrauch derselben für irgendeinen anderen Zweck als die Bedienung oder Wartung der in dieser Anleitung beschriebenen Ausrüstung ohne ausdrückliche schriftliche Erlaubnis der Sony Corporation.

HDSC-1000 (J/UC/EK)
2-127-909-03

Sony Corporation

© 1988

Printed in Japan
1989. 4 11